STATE	RIGHT OF WAY	SHEET NO.	TOTAL SHEETS
MONTANA		1	24
R/W ID.	STPP 14-5(28)207		
PROJECT NO.	4060-028		

ROSEBUD CO LINE - EAST

MONTANA DEPARTMENT OF TRANSPORTATION

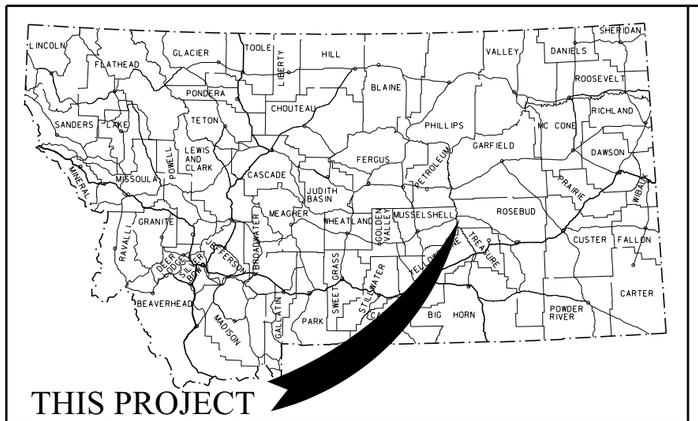

RIGHT OF WAY PLAN
FEDERAL AID PROJECT STPP 14–5(28)207
ROSEBUD CO LINE – EAST

MUSSELLSHELL AND ROSEBUD COUNTIES

LENGTH 10.9 MILES

SEE SHEET NO. 2 FOR OWNERSHIP NAMES, ADDRESSES, AREAS, ETC.

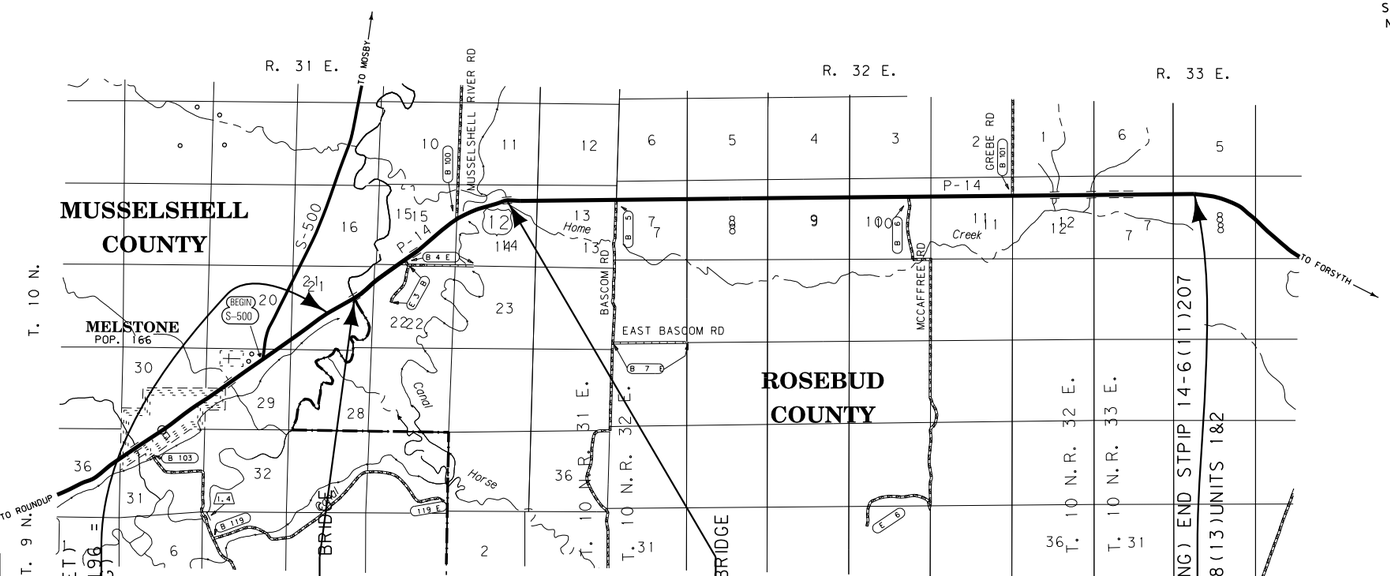

PLAN LEGEND

- PROPOSED RIGHT OF WAY LINE
- EXISTING RIGHT OF WAY LINE
- RAILROAD RIGHT OF WAY LINE
- RIGHT OF WAY BASELINE
- STK'D CENTERLINE
- SECTION LINE
- OWNERSHIP BOUNDARY
- FULL ACCESS CONTROL (AC)
- LIMITED ACCESS CONTROL
- EXISTING FULL ACCESS CONTROL (EFAC)
- EXISTING LIMITED ACCESS CONTROL (ELAC)
- PRESENT TRAVELED WAY (P.T.W.)
- FENCE LINE
- EXISTING GUARDRAIL
- PROPOSED GUARDRAIL
- GATE IN FENCE
- CATTLE GUARD: EXIST. - PROPOSED
- SECTION CORNER (FOUND / UNFOUND)
- ¼ SECTION CORNER
- CLOSING CORNER
- MEANDER CORNER
- CENTER OF SECTION
- 1/16 SECTION CORNER FOUND
- RIGHT OF WAY MONUMENT (FOUND / CALCULATED)
- PROPERTY CORNER PIN
- POWER POLE IN PLACE
- TELEPHONE POLE IN PLACE
- TELEGRAPH POLE IN PLACE
- LIGHT POLE
- PROPOSED CULVERT
- EXISTING CULVERT
- OUTLET DITCH
- INLET DITCH
- EXISTING DITCH
- CHANNEL CHANGES (CH. CH.)
- DITCH BLOCK
- RIPRAP
- BRIDGES
- RAILROADS
- PARCEL NUMBERS (2)
- APPROACH: EXIST.- PROPOSED

ASSOCIATED PROJECTS
STPP 14-6(8)207 P.E.

RELATED PROJECTS
328-1
328 (13)

FOR EXISTING R/W RETRACEMENT, SEE C.O.S. 0110477

GRID STATE PLANE COORDINATES

THIS IS A STATE PLANE COORDINATE PROJECT. ALL DIMENSIONS, DISTANCES AND AREAS ON THIS PROJECT ARE GRID, EXCEPT FOR THE EXISTING R/W WIDTH DIMENSION, WHICH IS RECORD.
THE COMBINATION SCALE FACTOR IS 0.99927047

CONSTRUCTION LIMITS
CUT SECTION (TOP OF CUT)
TRANSITION
TOE OF FILL
BACKSLOPE LIMITS INCLUDE ROUNDING

MAP REVISED 12-16-16

FHWA/MDT APPROVAL 8-25-05

3
2
1

MDT MONTANA DEPARTMENT OF TRANSPORTATION

C:\DGN\4060rott001.dgn
5/2/2022
10:24:12 AM CPS - U6576

STATE	RIGHT OF WAY	SHEET NO.	TOTAL SHEETS
MONTANA		2	22
R/W ID.	STPP 14-5(28)207		
PROJECT NO.	4060-028		

ROSEBUD CO LINE - EAST

OWNERSHIP

PARCEL	NAME	ADDRESS	TOTAL AREA	GROSS R/W AREA	EX. EASE. AREA	NET AREA	REMAINDER LEFT	REMAINDER RIGHT	CONST. PMT. AREA	EASEMENT AREA	SHEET NO.
1	TERRITORIAL HOLDINGS, LLC	104 TURTLE RD, TWIN BRIDGES, MT 59754	160+ AC		OWNER NOTIFICATION ONLY						3,4
2	TERRITORIAL HOLDINGS, LLC	104 TURTLE RD, TWIN BRIDGES, MT 59754	160+ AC	3.66AC		3.66 AC					3,4
3	TERRITORIAL HOLDINGS, LLC	104 TURTLE RD, TWIN BRIDGES, MT 59754	160+ AC		OWNER NOTIFICATION ONLY						4
4	MDT (DNRC)	1625 11 AVE, HELENA, MT 59620-1601	2.23 AC		OWNER NOTIFICATION ONLY						4
5	TERRITORIAL HOLDINGS, LLC	104 TURTLE RD, TWIN BRIDGES, MT 59754	160+ AC		FOR NEGOTIATIONS ONLY						4
6	JOHN AND GLENDA SPEISER (RAIL ROAD ONLY)	1851 HILL POINTE RD, APT 2523,	10.06 AC	2.72 AC		2.72 AC		7.34 AC			4,5
		HENDERSON, NV 89074-0981									
7	DUSTIN K. ALLEN	PO BOX 244, MELSTONE, MT 59054	160+ AC		OWNER NOTIFICATION ONLY						4
8	DUANE & KAREN SHELHAMER	PO BOX 157, MELSTONE, MT 59054-0157			OWNER NOTIFICATION ONLY						4,5
9	DUSTIN K. ALLEN	PO BOX 244, MELSTONE, MT 59054	160+ AC		OWNER NOTIFICATION ONLY						4, 5
10	MT STATE LANDS (M.D.T.)	PO Box 201001, 2701 Prospect Ave,	40.09 AC	1.62 AC	1.58 AC	0.04 AC	38.27 AC	0.20 AC			5
		HELENA, MT 59620-1001									
11	DUSTIN K. ALLEN	PO BOX 244, MELSTONE, MT 59054	160+ AC		OWNER NOTIFICATION ONLY						5
12	DAVID HARUO NOJIMA	PO BOX 276, MELSTONE, MT 59054-0276	160+ AC		OWNER NOTIFICATION ONLY						5-7
13	DELETED										5-7
14	TRAVIS NEWMAN	PO BOX 39, MELSTONE, MT 59054-0039	160+ AC	22.77 AC	20.25 AC	2.52 AC					5-7
15	DELPHIA-MELSTONE CANAL USERS ASSOCIATION				FOR NEGOTIATIONS ONLY						7
16	HJELVIK FAMILY TRUST	PO BOX 313, MELSTONE, MT 59054	160+ AC	12.67 AC	10.05 AC	* 2.62 AC				0.05 AC	7, 8
17	TERRITORIAL HOLDINGS, LLC	104 TURTLE RD, TWIN BRIDGES, MT 59754	160+ AC	13.88 AC	13.69 AC	0.11 AC					7, 8
18	GENE KLAMERT AND RONNA KLAMERT	2100 44TH ST.W., BILLINGS, MT 59106-3945	160+ AC	4.02 AC	1.23 AC	2.79 AC					7,8
19	HJELVIK FAMILY TRUST	PO BOX 313, MELSTONE, MT 59054	160+ AC		FOR NEGOTIATIONS ONLY						8-10
20	HJELVIK FAMILY TRUST	PO BOX 313, MELSTONE, MT 59054	160+ AC	39.28 AC	16.39 AC	22.89 AC				0.22 AC	8-13
21	GENE KLAMERT AND RONNA KLAMERT	2100 44TH ST.W., BILLINGS, MT 59106-3945	160+ AC	0.19 AC		0.19 AC					10-13
22	GENE KLAMERT	2100 44TH ST.W., BILLINGS, MT 59106-3945	160+ AC	0.75 AC		0.75 AC			0.11 AC		13-17
23	BRENT M. HJELVIK & CONNIE HJELVIK	BOX 54, MELSTONE, MT 59054-0054	160+ AC	52.93 AC	33.89 AC	19.04 AC					13-17
24	GLENN LEAND("LEE") CORYELL	4345 HELENA ST. NE., PETERSBURG, FL 33703	160+ AC						0.09 AC	0.15 AC	17-19
	AS TRUSTEE FOR THE BENIFIT OF THE OWNERS										
25	GLENN LELAND ("LEE") CORYELL	4345 HELENA ST. NE., PETERSBURG, FL 33703	160+ AC	8.72 AC		8.72 AC					17-19
	AS TRUSTEE FOR THE BENIFIT OF THE OWNERS										
26	WILLOLA J. GLEGOR, SCOTT GLEGOR AND	92761 SIMONSEN RD, ASTORIA, OR 97103	160+ AC	8.40 AC		8.40 AC					19,20
	NICK P. GLEGOR										
	KELLY D. LOWERY	1804 BIGLEE ST., SCOTTSDALE, VA. 15683									
27	WILLOLA J. GLEGOR, SCOTT GLEGOR AND	92761 SIMONSEN RD, ASTORIA, OR 97103	160+ AC	3.10 AC		3.10 AC					19, 20
	NICK P. GLEGOR										
	KELLY D. LOWERY	1804 BIGLEE ST., SCOTTSDALE, VA. 15683									
28	GREBE FAMILY LIMITED PARTNERSHIP	BOX 187, MELSTONE, MT 59054-0187	160+ AC	26.31 AC	9.70 AC	16.61 AC					20-22
	A MONTANA LIMITED PARTNERSHIP										
29	BRENT M. HJELVIK & CONNIE HJELVIK	BOX 54, MELSTONE, MT 59054-0054								0.04 AC	5-7
28.1	GREBE FAMILY LIMITED PARTNERSHIP	BOX 187, MELSTONE, MT 59054-0187	160+ AC	6.17 AC	5.50 AC	0.66 AC					21
	A MONTANA LIMITED PARTNERSHIP										

RIGHT-OF-WAY COORDINATE ASCII FILES

R/W BREAK COORDS: 4060ROBRK001.TXT
R/W BASELINE COORDS: 4060ROBAS001.TXT
ALL FILES ARE LOCATED ON THE CADD SERVER IN THE RO DIRECTORY, UNDER PROJECT:

*TO BE ACQUIRED AS AN EASEMENT IN THE NAME OF MDT

CONSTRUCTION LIMITS
CUT SECTION (TOP OF CUT)
TRANSITION
TOE OF FILL
BACKSLOPE LIMITS INCLUDE ROUNDING

MAP REVISED 12-16-16 1-31-17 5-17-17 6-30-17 8-23-17 9-6-17 9-19-17 10-11-18

FHWA/MDT APPROVAL
8-25-05

3
2
1

MDT MONTANA DEPARTMENT OF TRANSPORTATION

C:\DGN\4060roown001.dgn
5/2/2022
10:24:22 AM CPS - U6576

NOTES:
1. THE PROPOSED R/W LINE WHERE A SPIRAL CURVE TRANSITION IS USED IS A CHORD RATHER THAN A CONCENTRIC CURVE.
2. ALL STATIONS AND OFFSETS FOR R/W BREAKS ARE IN REFERENCE TO THE R/W BASELINE.

FOR EXISTING R/W RETRACEMENT, SEE C.O.S. 0110477

GRID STATE PLANE COORDINATES

THIS IS A STATE PLANE COORDINATE PROJECT. ALL DIMENSIONS, DISTANCES AND AREAS ON THIS PROJECT ARE GRID, EXCEPT FOR THE EXISTING R/W WIDTH DIMENSION, WHICH IS RECORD.
THE COMBINATION SCALE FACTOR IS 0.99927047

MONTANA DEPARTMENT OF TRANSPORTATION
RIGHT OF WAY PLAN
ROSEBUD COUNTY

STATE	RIGHT OF WAY	SHEET NO.	TOTAL SHEETS
MONTANA		3	22
R/W ID.	STPP 14-5(28)207		
PROJECT NO.	4060-028		

ROSEBUD CO LINE - EAST

SEE SHEET NO. 2 FOR OWNERSHIP NAMES, ADDRESSES, AREAS, ETC.

PC 43+85.50 IS S 42 °22'22" E
3715.66' FROM THE NW CORNER
OF SECTION 22. FND MDT A.C. MON

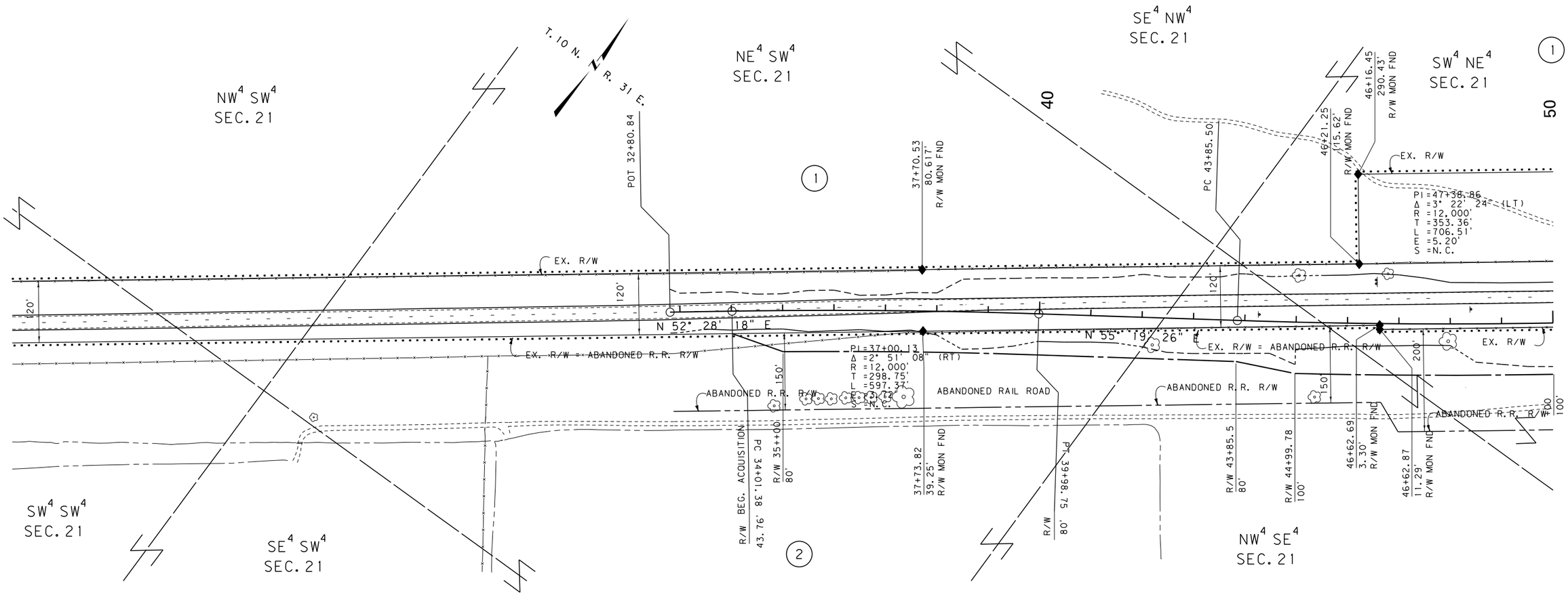

PC 43+85.50 IS N 87 °15'12" E
2535.53' FROM THE W1/4 CORNER
OF SECTION 22. FND MDT A.C. MON

CONSTRUCTION LIMITS	MAP REVISED 12-16-16
CUT SECTION (TOP OF CUT)	
TRANSITION	
TOE OF FILL	
BACKSLOPE LIMITS INCLUDE ROUNDING	FHWA/MDT APPROVAL 8-25-05

3	MDT MONTANA DEPARTMENT OF TRANSPORTATION	C:\DGN\4060ropln001.dgn
2		5/2/2022
1		10:24:32 AM CPS - U6576

NOTES:
1. THE PROPOSED R/W LINE WHERE A SPIRAL CURVE TRANSITION IS USED IS A CHORD RATHER THAN A CONCENTRIC CURVE.
2. ALL STATIONS AND OFFSETS FOR R/W BREAKS ARE IN REFERENCE TO THE R/W BASELINE.

FOR EXISTING R/W RETRACEMENT, SEE
C.O.S. 0110477

GRID STATE PLANE COORDINATES

THIS IS A STATE PLANE COORDINATE PROJECT. ALL DIMENSIONS, DISTANCES AND AREAS ON THIS PROJECT ARE GRID, EXCEPT FOR THE EXISTING R/W WIDTH DIMENSION, WHICH IS RECORD.
THE COMBINATION SCALE FACTOR IS 0.99927047

MONTANA DEPARTMENT OF TRANSPORTATION

RIGHT OF WAY PLAN

MUSSELSHELL COUNTY

SCALE 1"=100'

0 50' 100' 200' 300'

STATE	RIGHT OF WAY	SHEET NO.	TOTAL SHEETS
MONTANA		4	22
R/W ID.	STPP 14-5(28)207		
PROJECT NO.	4060-028		

ROSEBUD CO LINE - EAST

SEE SHEET NO. 2 FOR OWNERSHIP NAMES, ADDRESSES, AREAS, ETC.

STA 75+60.70 IS S 0° 37' 16" E
808.71' FROM THE NW CORNER
OF SECTION 22. FND MDT A.C. MON

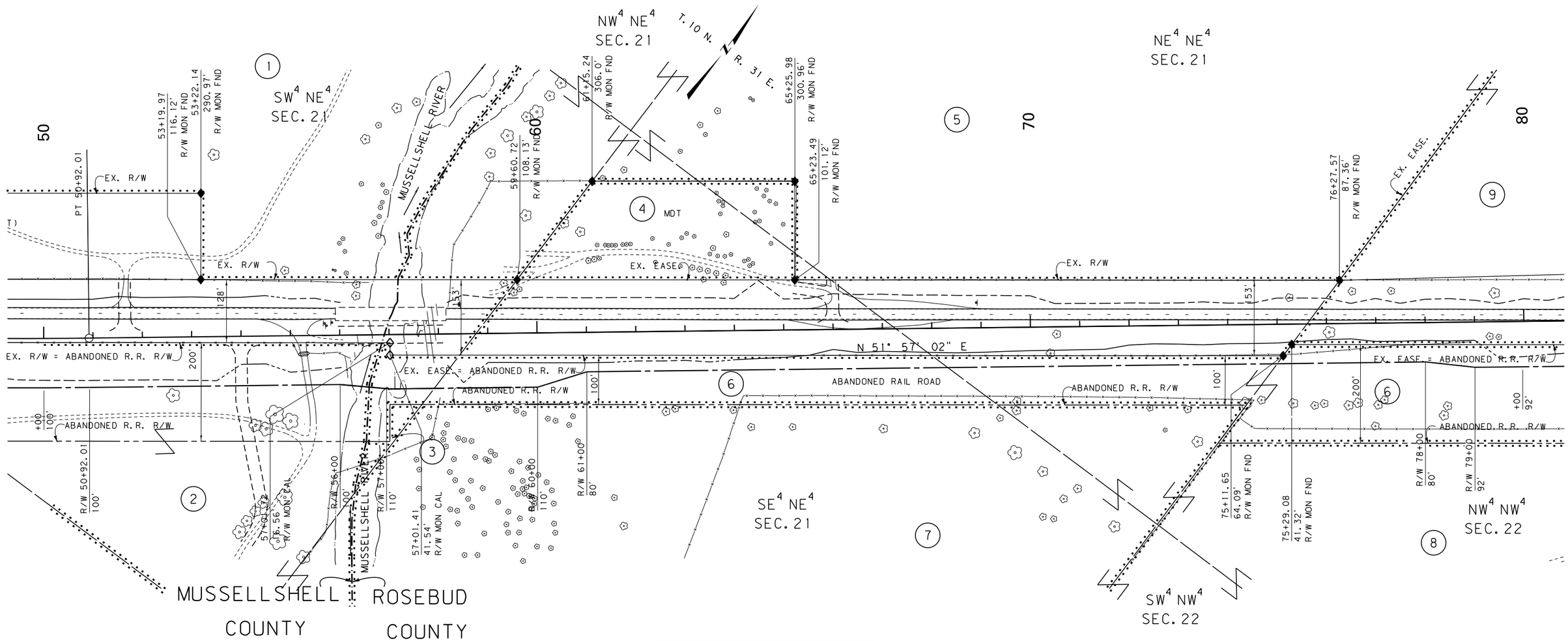

STA 75+60.70 IS N 0° 37' 16" W
1818.98' FROM THE W 1/4 CORNER
OF SECTION 22. FND MDT A.C. MON

CONSTRUCTION LIMITS	MAP REVISED 12-16-16 3-8-18
CUT SECTION — TOP OF CUT	
TRANSITION	
TOE OF FILL	
BACKSLOPE LIMITS INCLUDE ROUNDING	FHWA/MDT APPROVAL 8-25-05

3	MDT MONTANA DEPARTMENT OF TRANSPORTATION	C:\DGN\4060ropln001.dgn
2		5/2/2022
1		10:24:36 AM CPS - U6576

NOTES:
1. THE PROPOSED R/W LINE WHERE A SPIRAL CURVE TRANSITION IS USED IS A CHORD RATHER THAN A CONCENTRIC CURVE.
2. ALL STATIONS AND OFFSETS FOR R/W BREAKS ARE IN REFERENCE TO THE R/W BASELINE.

FOR EXISTING R/W RETRACEMENT, SEE
C.O.S. 0110477

GRID STATE PLANE COORDINATES

THIS IS A STATE PLANE COORDINATE PROJECT. ALL DIMENSIONS, DISTANCES AND AREAS ON THIS PROJECT ARE GRID, EXCEPT FOR THE EXISTING R/W WIDTH DIMENSION, WHICH IS RECORD.
THE COMBINATION SCALE FACTOR IS 0.99927047

MONTANA DEPARTMENT OF TRANSPORTATION

RIGHT OF WAY PLAN

MUSSELLSHELL & ROSEBUD COUNTIES

SCALE 1"=100'

0 50' 100' 200' 300'

STATE	RIGHT OF WAY	SHEET NO.	TOTAL SHEETS
MONTANA		5	22
R/W ID.	STPP 14-5(28)207		
PROJECT NO.	4060-028		

ROSEBUD CO LINE - EAST

SEE SHEET NO. 2 FOR OWNERSHIP NAMES, ADDRESSES, AREAS, ETC.

STA 88+70.72 IS N 89° 50' 53" E
1040.34' FROM THE NW CORNER
OF SECTION 22. FND MDT A.C. MON

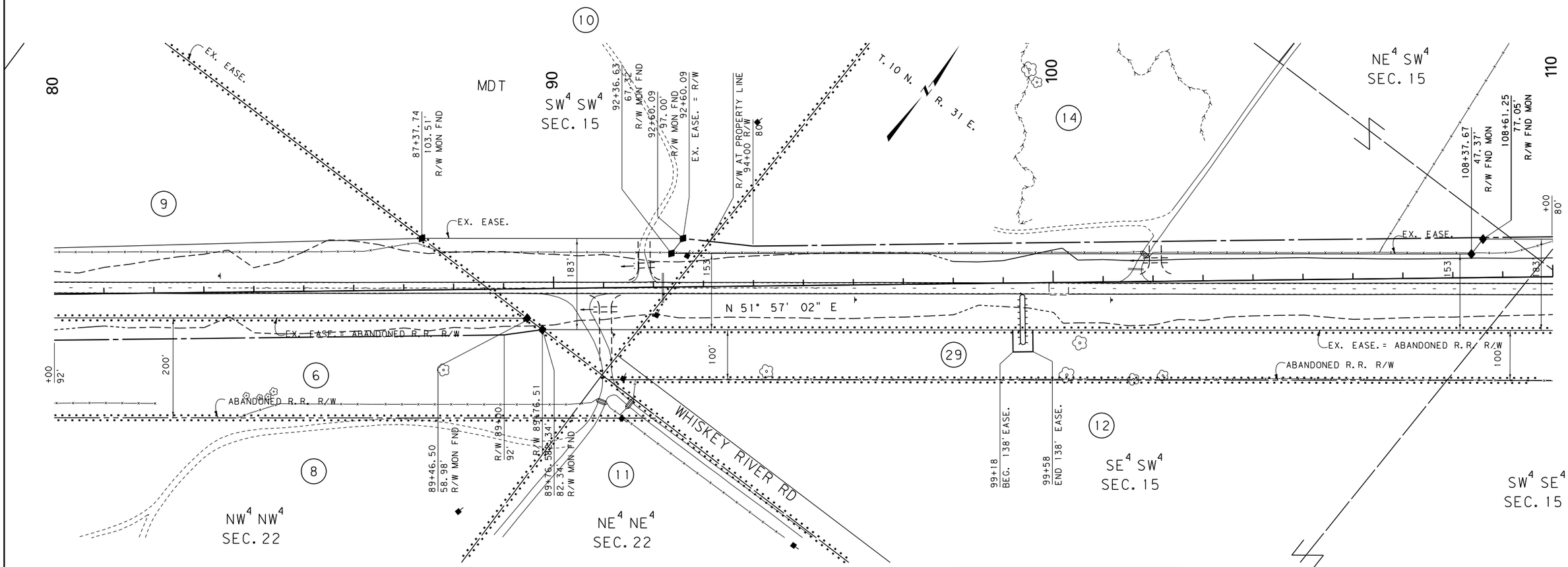

STA 88+70.72 IS S 89° 50' 53" W
1608.26' FROM THE N 1/4 CORNER
OF SECTION 22. FND MDT A.C. MON

CONSTRUCTION LIMITS	MAP REVISED 12-16-16 5-17-17 6-30-17 8-23-17
CUT SECTION (TOP OF CUT)	
TRANSITION	
TOE OF FILL	
BACKSLOPE LIMITS INCLUDE ROUNDING	FHWA/MDT APPROVAL 8-25-05

3	MDT MONTANA DEPARTMENT OF TRANSPORTATION	C:\DGN\4060ropln001.dgn
2		5/2/2022
1		10:24:40 AM CPS-U6576

NOTES:
1. THE PROPOSED R/W LINE WHERE A SPIRAL CURVE TRANSITION IS USED IS A CHORD RATHER THAN A CONCENTRIC CURVE.
2. ALL STATIONS AND OFFSETS FOR R/W BREAKS ARE IN REFERENCE TO THE R/W BASELINE.

FOR EXISTING R/W RETRACEMENT, SEE
C.O.S. 0110477

GRID STATE PLANE COORDINATES

THIS IS A STATE PLANE COORDINATE PROJECT. ALL DIMENSIONS, DISTANCES AND AREAS ON THIS PROJECT ARE GRID, EXCEPT FOR THE EXISTING R/W WIDTH DIMENSION, WHICH IS RECORD.
THE COMBINATION SCALE FACTOR IS 0.99927047

MONTANA DEPARTMENT OF TRANSPORTATION

RIGHT OF WAY PLAN

ROSEBUD COUNTY

SCALE 1"=100'

0 50' 100' 200' 300'

STATE	RIGHT OF WAY	SHEET NO.	TOTAL SHEETS
MONTANA		6	22
R/W ID.	STPP 14-5(28)207		
PROJECT NO.	4060-028		

ROSEBUD CO LINE - EAST

SEE SHEET NO. 2 FOR OWNERSHIP NAMES, ADDRESSES, AREAS, ETC.

PC 134+62.21 IS S 17° 32' 40" W
2576.49' FROM THE NE CORNER
OF SECTION 15. FND MDT A.C. MON

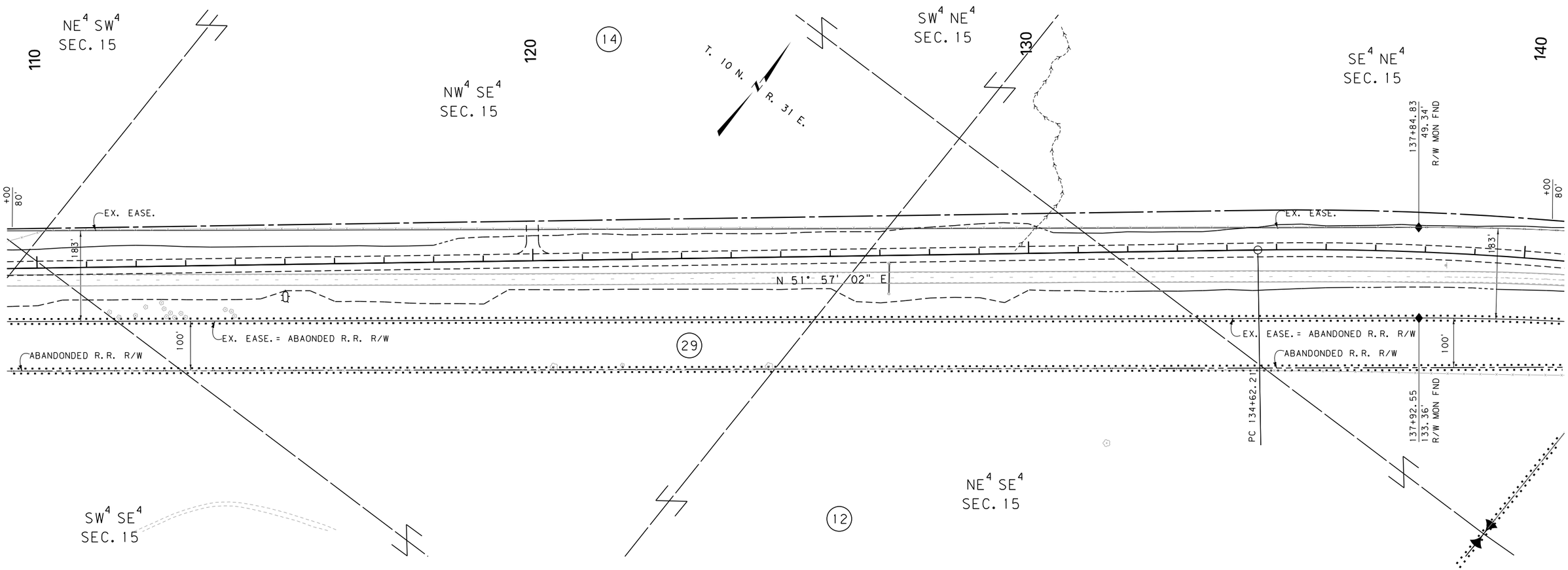

PC 134+62.21 IS N 75° 40' 39" W
731.65 FROM THE E ¼ CORNER
OF SECTION 15. FND MDT A.C. MON

CONSTRUCTION LIMITS	MAP REVISED 12-16-16 5-17-17 6-30-17 8-23-17
CUT SECTION — TOP OF CUT	
TRANSITION	
TOE OF FILL	
BACKSLOPE LIMITS INCLUDE ROUNDING	FHWA/MDT APPROVAL 8-25-05

3	MDT MONTANA DEPARTMENT OF TRANSPORTATION	C:\DGN\4060ropln002.dgn
2		5/2/2022
1		10:24:50 AM CPS-U6576

NOTES:
1. THE PROPOSED R/W LINE WHERE A SPIRAL CURVE TRANSITION IS USED IS A CHORD RATHER THAN A CONCENTRIC CURVE.
2. ALL STATIONS AND OFFSETS FOR R/W BREAKS ARE IN REFERENCE TO THE R/W BASELINE.

FOR EXISTING R/W RETRACEMENT, SEE
C.O.S. 0110477

GRID STATE PLANE COORDINATES

THIS IS A STATE PLANE COORDINATE PROJECT. ALL DIMENSIONS, DISTANCES AND AREAS ON THIS PROJECT ARE GRID, EXCEPT FOR THE EXISTING R/W WIDTH DIMENSION, WHICH IS RECORD.
THE COMBINATION SCALE FACTOR IS 0.99927047

MONTANA DEPARTMENT OF TRANSPORTATION

RIGHT OF WAY PLAN

ROSEBUD COUNTY

SCALE 1" = 100'

0 50' 100' 200' 300'

STATE	RIGHT OF WAY	SHEET NO.	TOTAL SHEETS
MONTANA		7	22
R/W ID.	STPP 14-5(28)207		
PROJECT NO.	4060-028		

ROSEBUD CO LINE - EAST

SEE SHEET NO. 2 FOR OWNERSHIP NAMES, ADDRESSES, AREAS, ETC.

STA 143+37.47 IS S 1° 28' 18" W
1969.93' FROM THE NE CORNER
OF SECTION 15. FND MDT A.C. MON

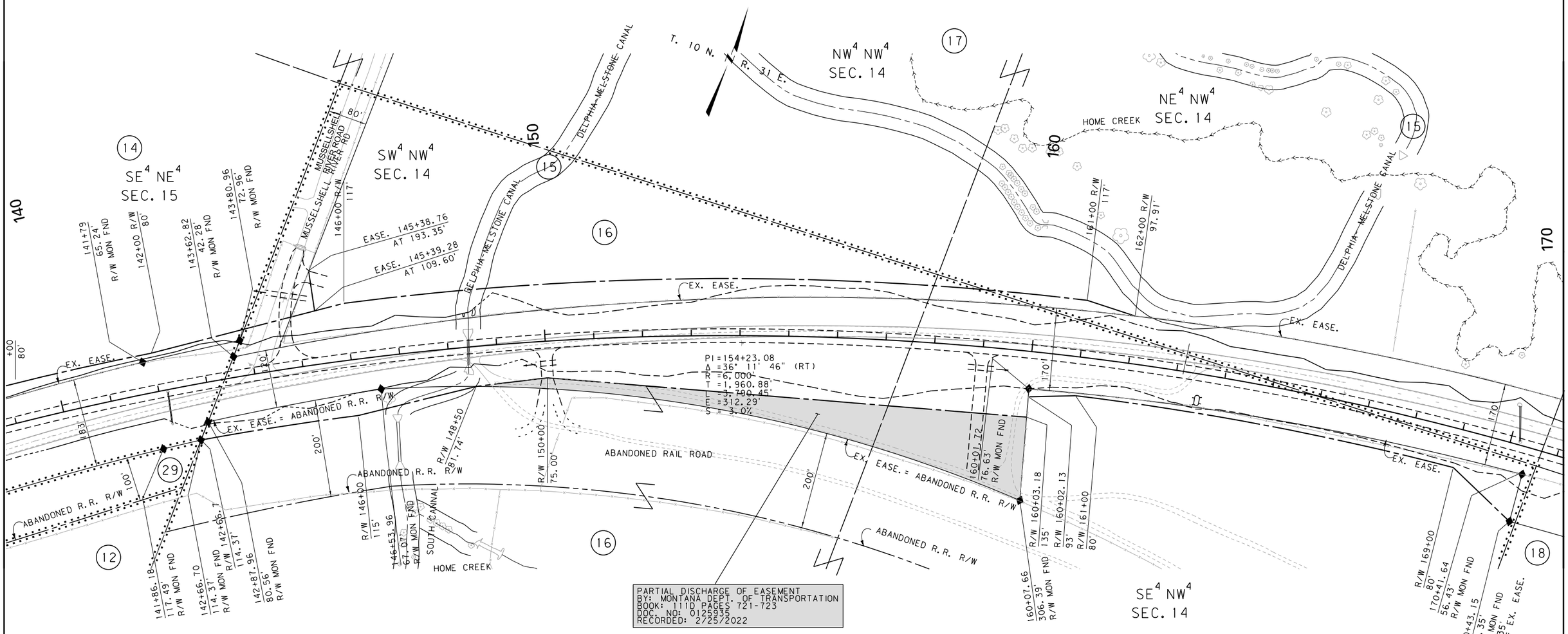

PARTIAL DISCHARGE OF EASEMENT
BY: MONTANA DEPT. OF TRANSPORTATION
BOOK: 111D PAGES 721-723
DOC. NO: 0125935
RECORDED: 2/25/2022

STA 143+37.47 IS N 1° 28' 18" E
668.58' FROM THE E ¼ CORNER
OF SECTION 15. FND MDT A.C. MON

FOR EXISTING R/W RETRACEMENT, SEE
C.O.S. 0110477

GRID STATE PLANE COORDINATES

THIS IS A STATE PLANE COORDINATE PROJECT. ALL DIMENSIONS, DISTANCES AND AREAS ON THIS PROJECT ARE GRID, EXCEPT FOR THE EXISTING R/W WIDTH DIMENSION, WHICH IS RECORD.
THE COMBINATION SCALE FACTOR IS 0.99927047

NOTES:
1. THE PROPOSED R/W LINE WHERE A SPIRAL CURVE TRANSITION IS USED IS A CHORD RATHER THAN A CONCENTRIC CURVE.
2. ALL STATIONS AND OFFSETS FOR R/W BREAKS ARE IN REFERENCE TO THE R/W BASELINE.

CONSTRUCTION LIMITS
CUT SECTION (TOP OF CUT)
TRANSITION
TOE OF FILL
BACKSLOPE LIMITS INCLUDE ROUNDING

MAP REVISED 12-16-16 5-17-17 6-30-17
8-23-17 9-19-17 2-22-18 3-8-18

FHWA/MDT APPROVAL
8-25-05

3
2
1

MDT MONTANA DEPARTMENT OF TRANSPORTATION

C:\DGN\4060ropln002.dgn
5/2/2022
10:24:54 AM CPS - U6576

MONTANA DEPARTMENT OF TRANSPORTATION
RIGHT OF WAY PLAN
ROSEBUD COUNTY
SCALE 1"=100'
0 50' 100' 200' 300'

STATE	RIGHT OF WAY	SHEET NO.	TOTAL SHEETS
MONTANA		8	22
R/W ID.	STPP 14-5(28)207		
PROJECT NO.	4060-028		

ROSEBUD CO LINE - EAST

SEE SHEET NO. 2 FOR OWNERSHIP NAMES, ADDRESSES, AREAS, ETC.

STA 196+44.51 IS S 0° 08' 49" E
1296.59' FROM THE NE CORNER
OF SECTION 14. FND MDT A.C. MON

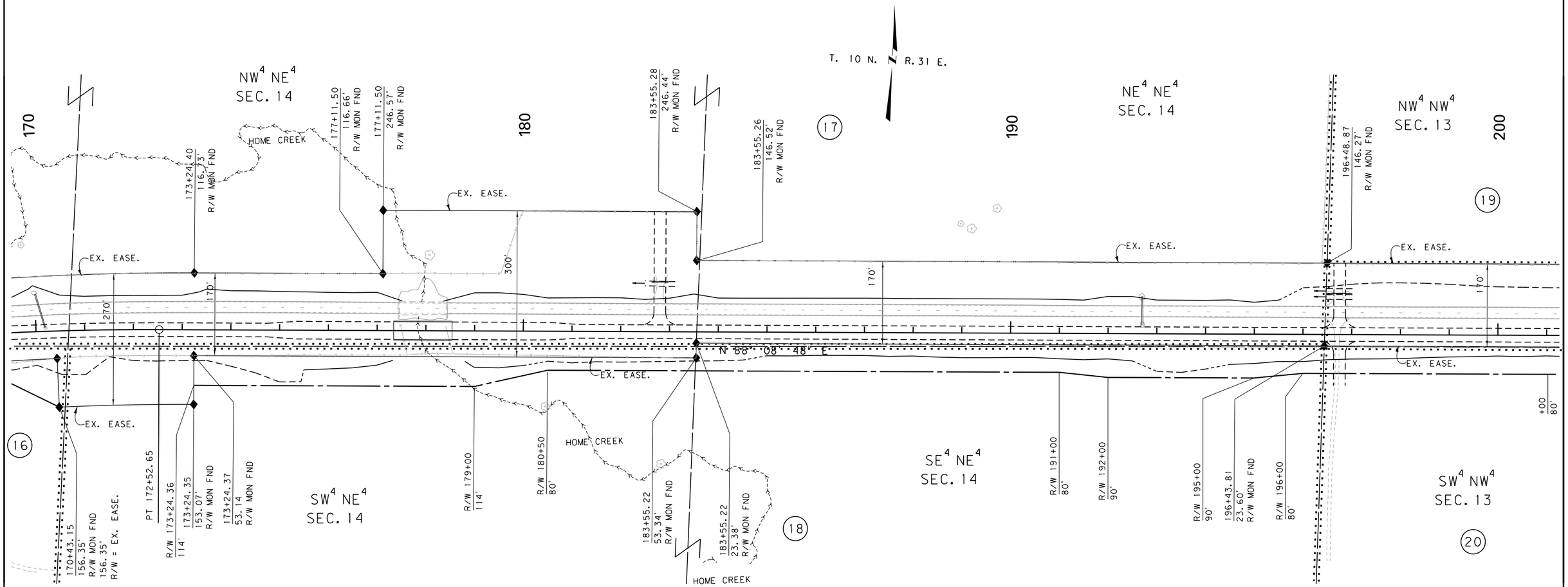

STA 196+44.51 IS N 0° 08' 49" W
1346.39' FROM THE E ¼ CORNER
OF SECTION 14. FND MDT A.C. MON

CONSTRUCTION LIMITS	MAP REVISED 12-16-16 6-30-17 8-23-17
CUT SECTION (TOP OF CUT)	
TRANSITION	
TOE OF FILL	
BACKSLOPE LIMITS INCLUDE ROUNDING	FHWA/MDT APPROVAL 8-25-05

3	MDT MONTANA DEPARTMENT OF TRANSPORTATION	C:\DGN\4060ropln002.dgn
2		5/2/2022
1		10:24:58 AM CPS - U6576

NOTES:
1. THE PROPOSED R/W LINE WHERE A SPIRAL CURVE TRANSITION IS USED IS A CHORD RATHER THAN A CONCENTRIC CURVE.
2. ALL STATIONS AND OFFSETS FOR R/W BREAKS ARE IN REFERENCE TO THE R/W BASELINE.

FOR EXISTING R/W RETRACEMENT, SEE
C.O.S. 0110477

GRID STATE PLANE COORDINATES

THIS IS A STATE PLANE COORDINATE PROJECT. ALL DIMENSIONS, DISTANCES AND AREAS ON THIS PROJECT ARE GRID, EXCEPT FOR THE EXISTING R/W WIDTH DIMENSION, WHICH IS RECORD.
THE COMBINATION SCALE FACTOR IS 0.99927047

MONTANA DEPARTMENT OF TRANSPORTATION

RIGHT OF WAY PLAN

ROSEBUD COUNTY

SCALE 1" = 100'

0 50' 100' 200' 300'

STATE	RIGHT OF WAY	SHEET NO.	TOTAL SHEETS
MONTANA		9	22
R/W ID.	STPP 14-5(28)207		
PROJECT NO.	4060-028		

ROSEBUD CO LINE - EAST

SEE SHEET NO. 2 FOR OWNERSHIP NAMES, ADDRESSES, AREAS, ETC.

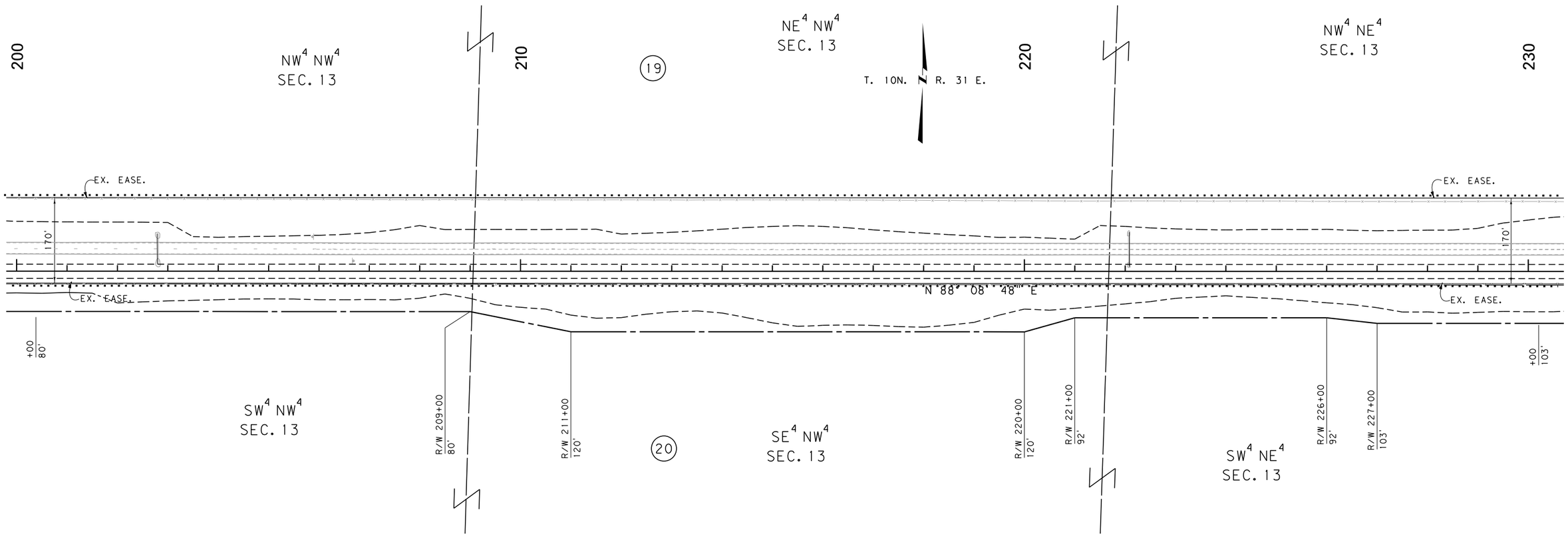

CONSTRUCTION LIMITS	MAP REVISED 12-16-16
CUT SECTION (TOP OF CUT)	
TRANSITION	
TOE OF FILL	
BACKSLOPE LIMITS INCLUDE ROUNDING	FHWA/MDT APPROVAL 8-25-05

3	MDT MONTANA DEPARTMENT OF TRANSPORTATION	C:\DGN\4060ropln003.dgn
2		5/2/2022
1		10:25:10 AM CPS - U6576

NOTES:
1. THE PROPOSED R/W LINE WHERE A SPIRAL CURVE TRANSITION IS USED IS A CHORD RATHER THAN A CONCENTRIC CURVE.
2. ALL STATIONS AND OFFSETS FOR R/W BREAKS ARE IN REFERENCE TO THE R/W BASELINE.

FOR EXISTING R/W RETRACEMENT, SEE C.O.S. 0110477

GRID STATE PLANE COORDINATES

THIS IS A STATE PLANE COORDINATE PROJECT. ALL DIMENSIONS, DISTANCES AND AREAS ON THIS PROJECT ARE GRID, EXCEPT FOR THE EXISTING R/W WIDTH DIMENSION, WHICH IS RECORD.
THE COMBINATION SCALE FACTOR IS 0.99927047

MONTANA DEPARTMENT OF TRANSPORTATION

RIGHT OF WAY PLAN

ROSEBUD COUNTY

SCALE 1" = 100'

0 50' 100' 200' 300'

STATE	RIGHT OF WAY	SHEET NO.	TOTAL SHEETS
MONTANA		10	22
R/W ID.	STPP 14-5(28)207		
PROJECT NO.	4060-028		

ROSEBUD CO LINE - EAST

SEE SHEET NO. 2 FOR OWNERSHIP NAMES, ADDRESSES, AREAS, ETC.

STA 246+90.80 IS S 0° 08' 24" W
1291.14' FROM THE NE CORNER
OF SECTION 13. FND MDT A.C. MON

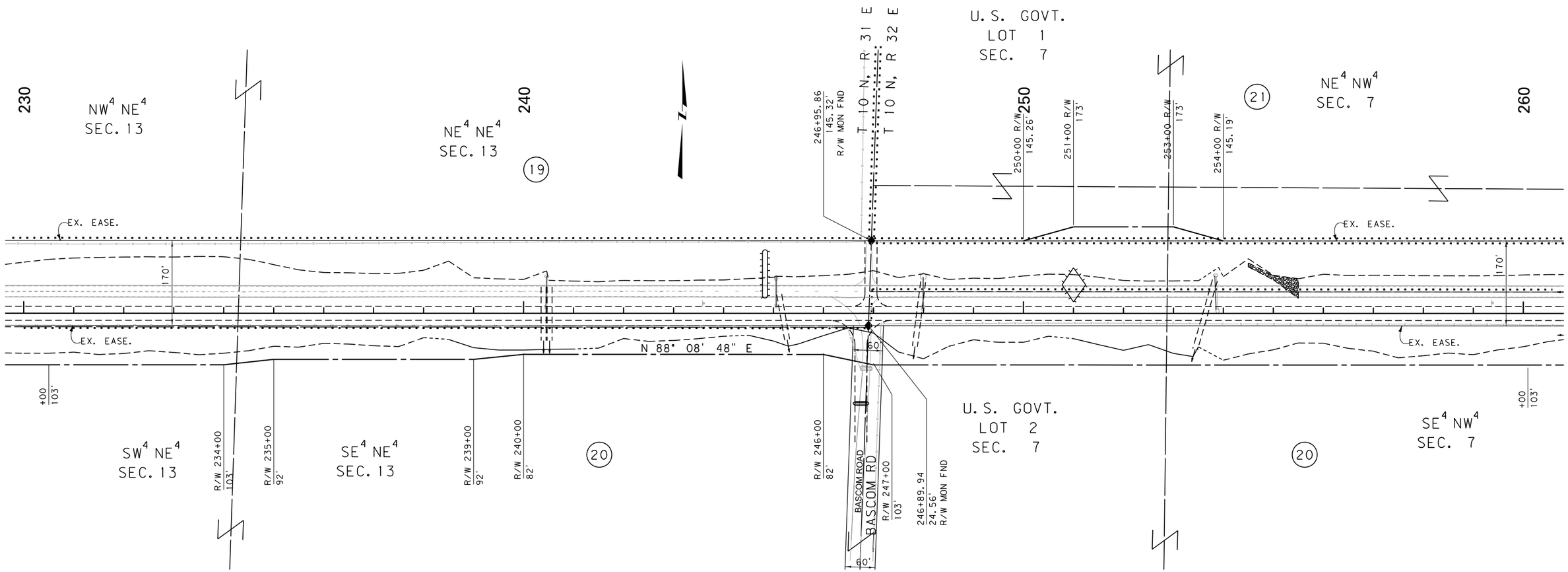

STA 246+90.80 IS N 0° 08' 24" E
1063.07' FROM THE W 1/4 CORNER
OF SECTION 7. FND MDT A.C. MON

CONSTRUCTION LIMITS	MAP REVISED 12-16-16
CUT SECTION (TOP OF CUT)	
TRANSITION	
TOE OF FILL	
BACKSLOPE LIMITS INCLUDE ROUNDING	FHWA/MDT APPROVAL 8-25-05

3	MDT MONTANA DEPARTMENT OF TRANSPORTATION	C:\DGN\4060ropln003.dgn
2		5/2/2022
1		10:25:13 AM CPS - U6576

NOTES:
1. THE PROPOSED R/W LINE WHERE A SPIRAL CURVE TRANSITION IS USED IS A CHORD RATHER THAN A CONCENTRIC CURVE.
2. ALL STATIONS AND OFFSETS FOR R/W BREAKS ARE IN REFERENCE TO THE R/W BASELINE.

FOR EXISTING R/W RETRACEMENT, SEE
C.O.S. 0110477

GRID STATE PLANE COORDINATES

THIS IS A STATE PLANE COORDINATE PROJECT. ALL DIMENSIONS, DISTANCES AND AREAS ON THIS PROJECT ARE GRID, EXCEPT FOR THE EXISTING R/W WIDTH DIMENSION, WHICH IS RECORD.
THE COMBINATION SCALE FACTOR IS 0.99927047

MONTANA DEPARTMENT OF TRANSPORTATION

RIGHT OF WAY PLAN

ROSEBUD COUNTY

SCALE 1" = 100'

0 50' 100' 200' 300'

STATE	RIGHT OF WAY	SHEET NO.	TOTAL SHEETS
MONTANA		11	22
R/W ID.	STPP 14-5(28)207		
PROJECT NO.	4060-028		

ROSEBUD CO LINE - EAST

SEE SHEET NO. 2 FOR OWNERSHIP NAMES, ADDRESSES, AREAS, ETC.

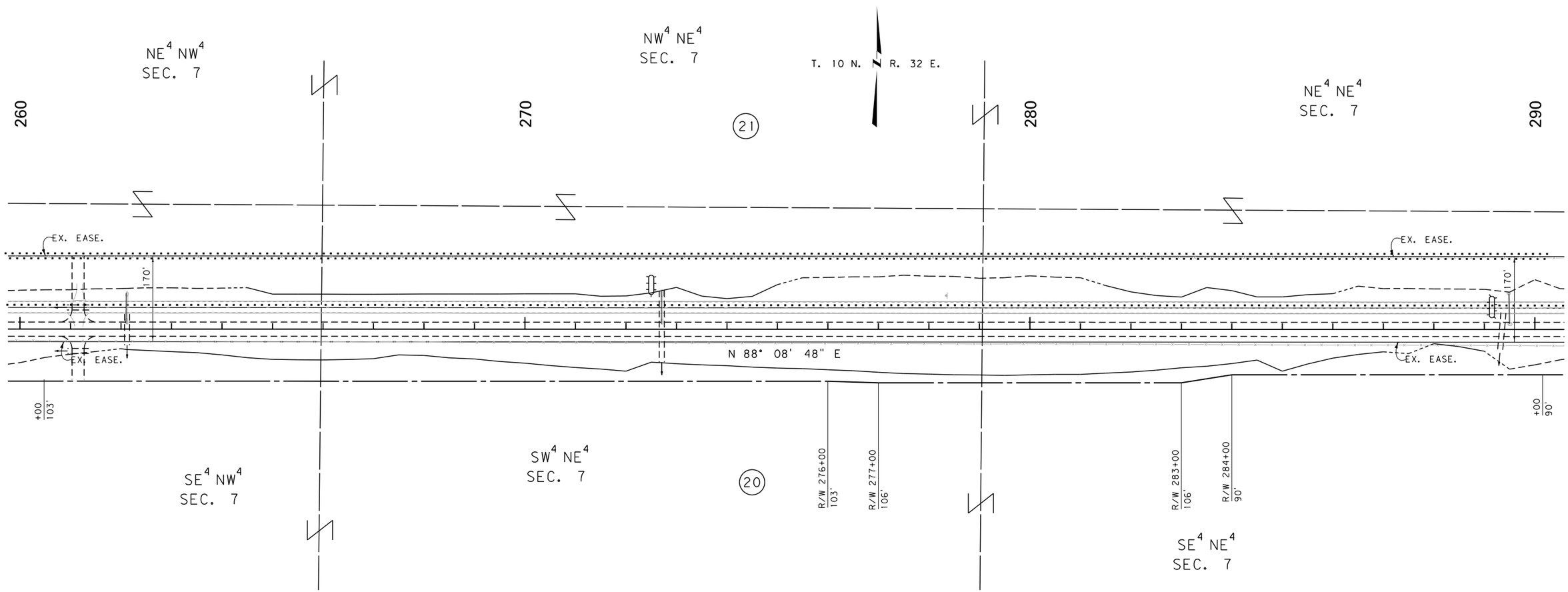

CONSTRUCTION LIMITS	MAP REVISED 12-16-16
CUT SECTION (TOP OF CUT)	
TRANSITION	
TOE OF FILL	
BACKSLOPE LIMITS INCLUDE ROUNDING	FHWA/MDT APPROVAL 8-25-05

3	MDT MONTANA DEPARTMENT OF TRANSPORTATION	C:\DGN\4060ropln003.dgn
2		5/2/2022
1		10:25:17 AM CPS-U6576

NOTES:
1. THE PROPOSED R/W LINE WHERE A SPIRAL CURVE TRANSITION IS USED IS A CHORD RATHER THAN A CONCENTRIC CURVE.
2. ALL STATIONS AND OFFSETS FOR R/W BREAKS ARE IN REFERENCE TO THE R/W BASELINE.

FOR EXISTING R/W RETRACEMENT, SEE C.O.S. 0110477

GRID STATE PLANE COORDINATES

THIS IS A STATE PLANE COORDINATE PROJECT. ALL DIMENSIONS, DISTANCES AND AREAS ON THIS PROJECT ARE GRID, EXCEPT FOR THE EXISTING R/W WIDTH DIMENSION, WHICH IS RECORD.
THE COMBINATION SCALE FACTOR IS 0.99927047

MONTANA DEPARTMENT OF TRANSPORTATION

RIGHT OF WAY PLAN

ROSEBUD COUNTY

SCALE 1"=100'

0 50' 100' 200' 300'

STATE	RIGHT OF WAY	SHEET NO.	TOTAL SHEETS
MONTANA		12	22
R/W ID.	STPP 14-5(28)207		
PROJECT NO.	4060-028		

ROSEBUD CO LINE - EAST

SEE SHEET NO. 2 FOR OWNERSHIP NAMES, ADDRESSES, AREAS, ETC.

STA 292+15.05 IS s 1° 25' 06"E
1553.37' FROM THE NE CORNER
OF SECTION 7. FND MDT A.C. MON

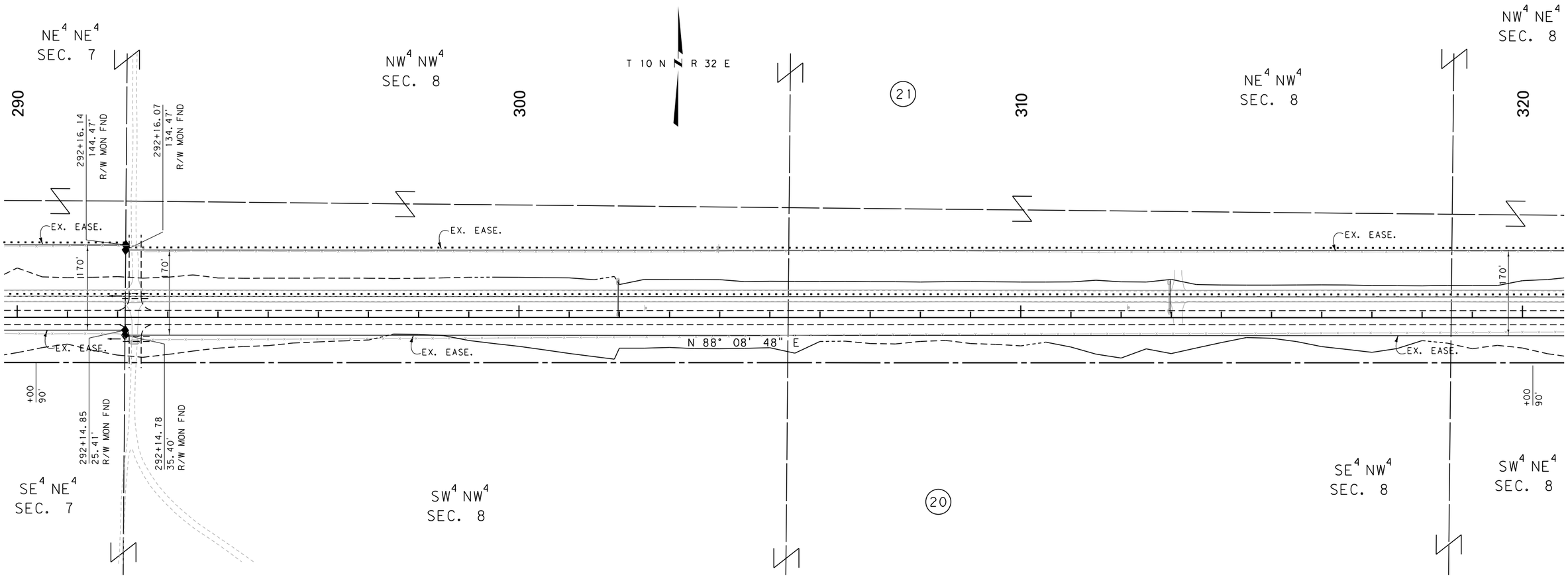

STA 292+15.05 IN 1° 25' 06"W
1089.74' FROM THE E ¼ CORNER
OF SECTION 7. FND MDT A.C. MON

CONSTRUCTION LIMITS	MAP REVISED 12-16-16
CUT SECTION (TOP OF CUT)	
TRANSITION	
TOE OF FILL	
BACKSLOPE LIMITS INCLUDE ROUNDING	FHWA/MDT APPROVAL 8-25-05

3	MDT MONTANA DEPARTMENT OF TRANSPORTATION	C:\DGN\4060ropln004.dgn
2		5/2/2022
1		10:25:26 AM CPS - U6576

NOTES:
1. THE PROPOSED R/W LINE WHERE A SPIRAL CURVE TRANSITION IS USED IS A CHORD RATHER THAN A CONCENTRIC CURVE.
2. ALL STATIONS AND OFFSETS FOR R/W BREAKS ARE IN REFERENCE TO THE R/W BASELINE.

FOR EXISTING R/W RETRACEMENT, SEE
C.O.S. 0110477

GRID STATE PLANE COORDINATES

THIS IS A STATE PLANE COORDINATE PROJECT. ALL DIMENSIONS, DISTANCES AND AREAS ON THIS PROJECT ARE GRID, EXCEPT FOR THE EXISTING R/W WIDTH DIMENSION, WHICH IS RECORD.
THE COMBINATION SCALE FACTOR IS 0.99927047

MONTANA DEPARTMENT OF TRANSPORTATION

RIGHT OF WAY PLAN

ROSEBUD COUNTY

SCALE 1" = 100'

0 50' 100' 200' 300'

STATE	RIGHT OF WAY	SHEET NO.	TOTAL SHEETS
MONTANA		13	22
R/W ID.	STPP 14-5(28)207		
PROJECT NO.	4060-028		

ROSEBUD CO LINE - EAST

SEE SHEET NO. 2 FOR OWNERSHIP NAMES, ADDRESSES, AREAS, ETC.

STA 345+01.37 IS S 1° 07' 11" E
1495.35' FROM THE NW CORNER
OF SECTION 9. FND MDT A.C. MON

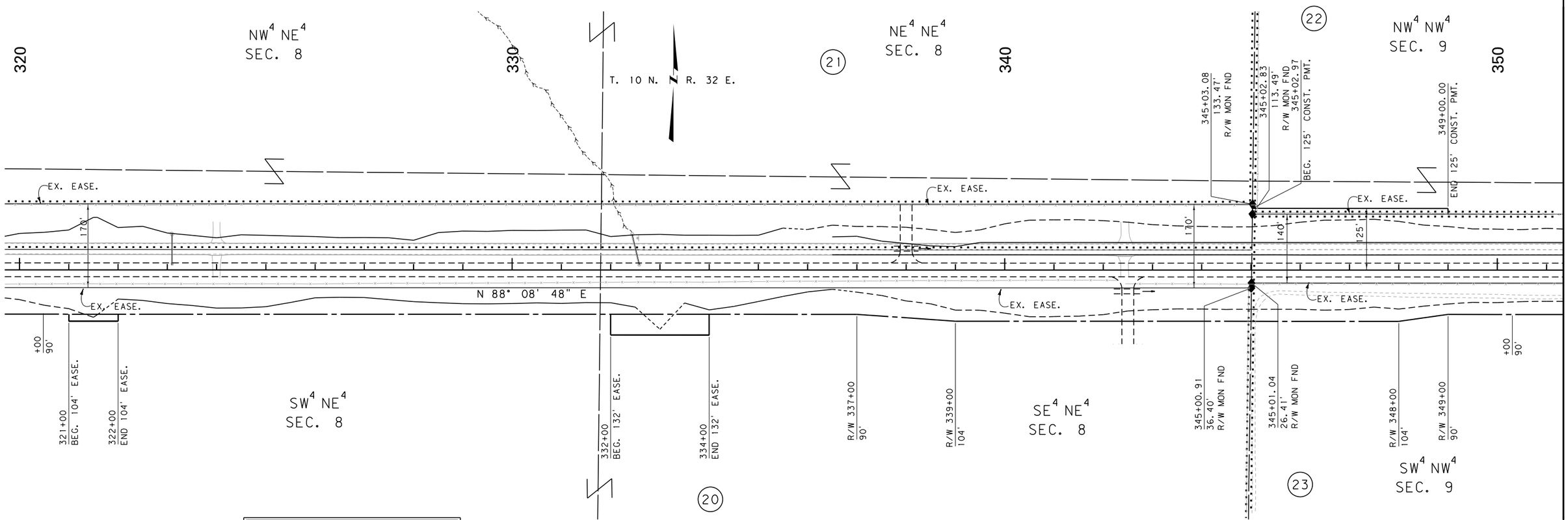

STA 345+01.37 IS N 1° 07' 11"W
1134.44' FROM THE W 1/4 CORNER
OF SECTION 9. FND MDT A.C. MON

CONSTRUCTION LIMITS	MAP REVISED 12-16-16
CUT SECTION (TOP OF CUT)	
TRANSITION	
TOE OF FILL	
BACKSLOPE LIMITS INCLUDE ROUNDING	FHWA/MDT APPROVAL 8-25-05

3	MDT MONTANA DEPARTMENT OF TRANSPORTATION	C:\DGN\4060ropln004.dgn
2		5/2/2022
1		10:25:30 AM CPS-U6576

NOTES:
1. THE PROPOSED R/W LINE WHERE A SPIRAL CURVE TRANSITION IS USED IS A CHORD RATHER THAN A CONCENTRIC CURVE.
2. ALL STATIONS AND OFFSETS FOR R/W BREAKS ARE IN REFERENCE TO THE R/W BASELINE.

FOR EXISTING R/W RETRACEMENT, SEE
C.O.S. 0110477

GRID STATE PLANE COORDINATES

THIS IS A STATE PLANE COORDINATE PROJECT. ALL DIMENSIONS, DISTANCES AND AREAS ON THIS PROJECT ARE GRID, EXCEPT FOR THE EXISTING R/W WIDTH DIMENSION, WHICH IS RECORD.
THE COMBINATION SCALE FACTOR IS 0.99927047

MONTANA DEPARTMENT OF TRANSPORTATION

RIGHT OF WAY PLAN

ROSEBUD COUNTY

SCALE 1"=100'

0 50' 100' 200' 300'

STATE	RIGHT OF WAY	SHEET NO.	TOTAL SHEETS
MONTANA		14	22
R/W ID.	STPP 14-5(28)207		
PROJECT NO.	4060-028		

ROSEBUD CO LINE - EAST

SEE SHEET NO. 2 FOR OWNERSHIP NAMES, ADDRESSES, AREAS, ETC.

STA 358+21.69 IS S 42°53'01"E
1982.11' FROM THE NW CORNER
OF SECTION 9. FND MDT A.C. MON

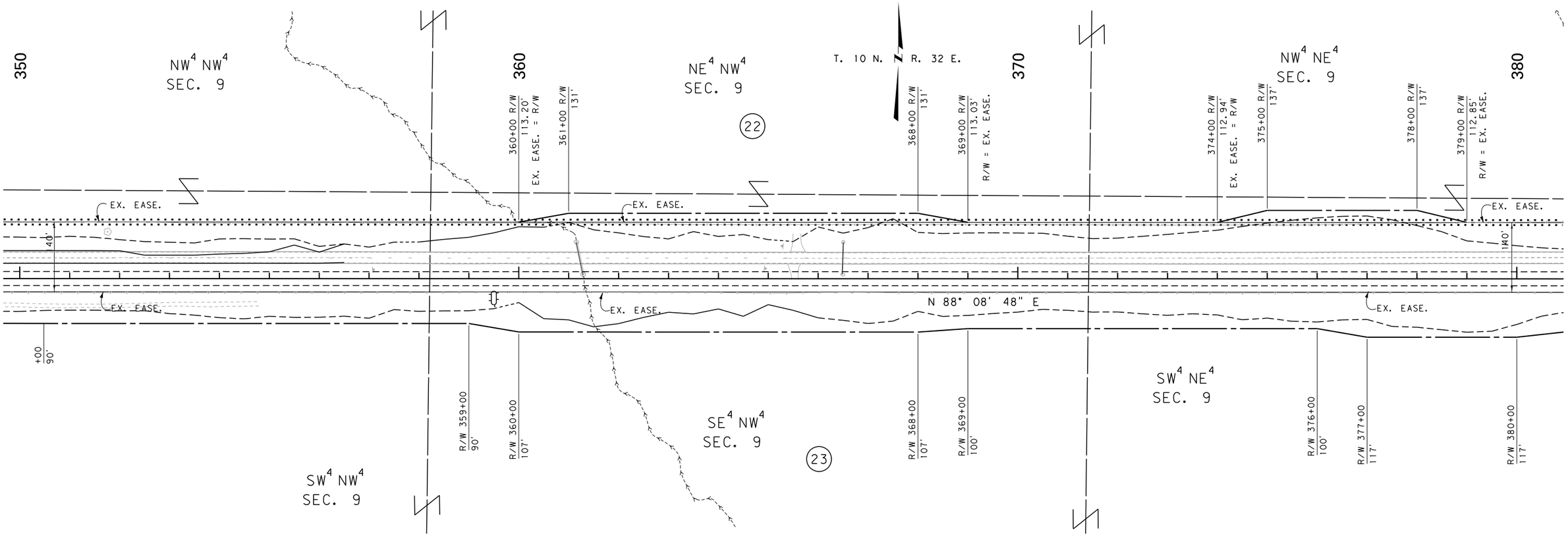

STA 370+42.00 IS N 67°51'27"W
2876.83 FROM THE E¼CORNER
OF SECTION 9. FND MDT A.C. MON

CONSTRUCTION LIMITS	MAP REVISED 12-16-16 5-17-17 3-8-18
CUT SECTION (TOP OF CUT)	
TRANSITION	
TOE OF FILL	
BACKSLOPE LIMITS INCLUDE ROUNDING	FHWA/MDT APPROVAL 8-25-05

3	MDT MONTANA DEPARTMENT OF TRANSPORTATION	C:\DGN\4060ropln004.dgn	
2		5/2/2022	
1		10:25:34 AM	CPS - U6576

NOTES:
1. THE PROPOSED R/W LINE WHERE A SPIRAL CURVE TRANSITION IS USED IS A CHORD RATHER THAN A CONCENTRIC CURVE.
2. ALL STATIONS AND OFFSETS FOR R/W BREAKS ARE IN REFERENCE TO THE R/W BASELINE.

FOR EXISTING R/W RETRACEMENT, SEE
C.O.S. 0110477

GRID STATE PLANE COORDINATES

THIS IS A STATE PLANE COORDINATE PROJECT. ALL DIMENSIONS, DISTANCES AND AREAS ON THIS PROJECT ARE GRID, EXCEPT FOR THE EXISTING R/W WIDTH DIMENSION, WHICH IS RECORD.
THE COMBINATION SCALE FACTOR IS 0.99927047

MONTANA DEPARTMENT OF TRANSPORTATION

RIGHT OF WAY PLAN

ROSEBUD COUNTY

SCALE 1"=100'

0 50' 100' 200' 300'

STATE	RIGHT OF WAY	SHEET NO.	TOTAL SHEETS
MONTANA		15	22
R/W ID.	STPP 14-5(28)207		
PROJECT NO.	4060-028		

ROSEBUD CO LINE - EAST

SEE SHEET NO. 2 FOR OWNERSHIP NAMES, ADDRESSES, AREAS, ETC.

STA 397+82.59 IS S 1° 14' 47" E
1471.81' FROM THE NE CORNER
OF SECTION 9. FND MDT A.C. MON

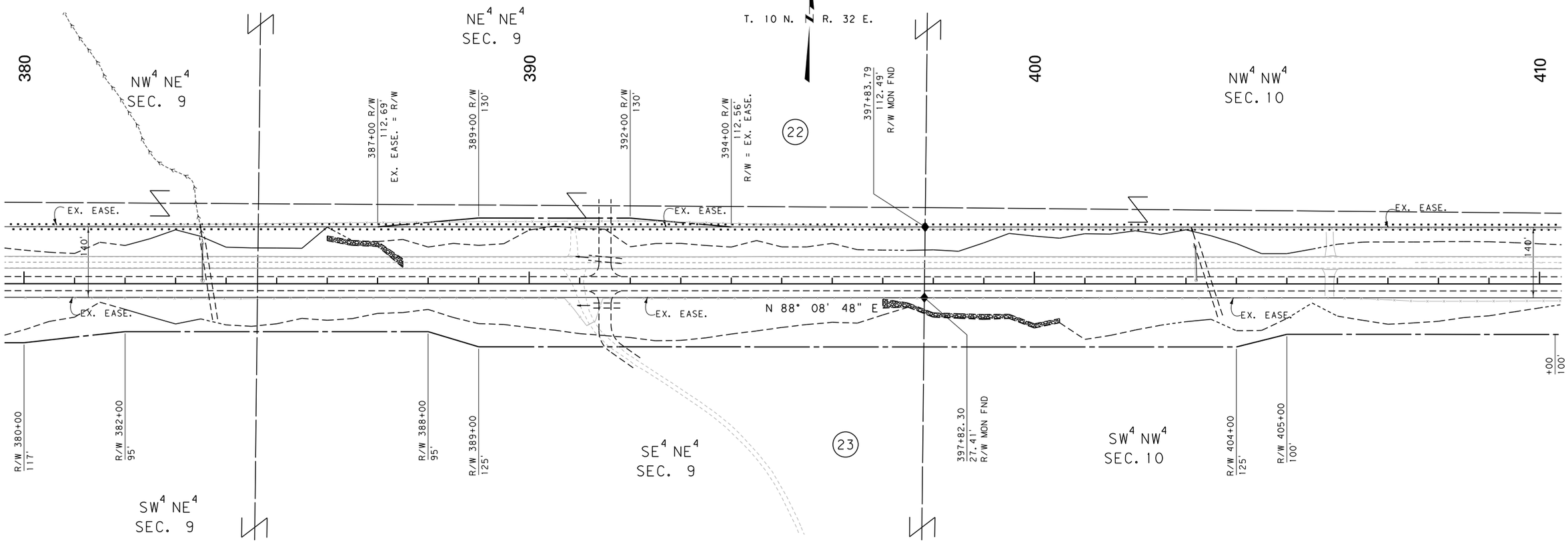

STA 397+82.59 IS N 1° 14' 47" W
1169.99' FROM THE E 1/4 CORNER
OF SECTION 9. FND MDT A.C. MON

CONSTRUCTION LIMITS	MAP REVISED 12-16-16
CUT SECTION (TOP OF CUT)	
TRANSITION	
TOE OF FILL	
BACKSLOPE LIMITS INCLUDE ROUNDING	FHWA/MDT APPROVAL 8-25-05

3	MDT MONTANA DEPARTMENT OF TRANSPORTATION	C:\DGN\4060ropln005.dgn	
2		5/2/2022	
1		10:25:46 AM	CPS - U6576

NOTES:
1. THE PROPOSED R/W LINE WHERE A SPIRAL CURVE TRANSITION IS USED IS A CHORD RATHER THAN A CONCENTRIC CURVE.
2. ALL STATIONS AND OFFSETS FOR R/W BREAKS ARE IN REFERENCE TO THE R/W BASELINE.

FOR EXISTING R/W RETRACEMENT, SEE
C.O.S. 0110477

GRID STATE PLANE COORDINATES

THIS IS A STATE PLANE COORDINATE PROJECT. ALL DIMENSIONS, DISTANCES AND AREAS ON THIS PROJECT ARE GRID, EXCEPT FOR THE EXISTING R/W WIDTH DIMENSION, WHICH IS RECORD.
THE COMBINATION SCALE FACTOR IS 0.99927047

MONTANA DEPARTMENT OF TRANSPORTATION

RIGHT OF WAY PLAN

ROSEBUD COUNTY

SCALE 1" = 100'

0 50' 100' 200' 300'

STATE	RIGHT OF WAY	SHEET NO.	TOTAL SHEETS
MONTANA		16	22
R/W ID.	STPP 14-5(28)207		
PROJECT NO.	4060-028		

ROSEBUD CO LINE - EAST

SEE SHEET NO. 2 FOR OWNERSHIP NAMES, ADDRESSES, AREAS, ETC.

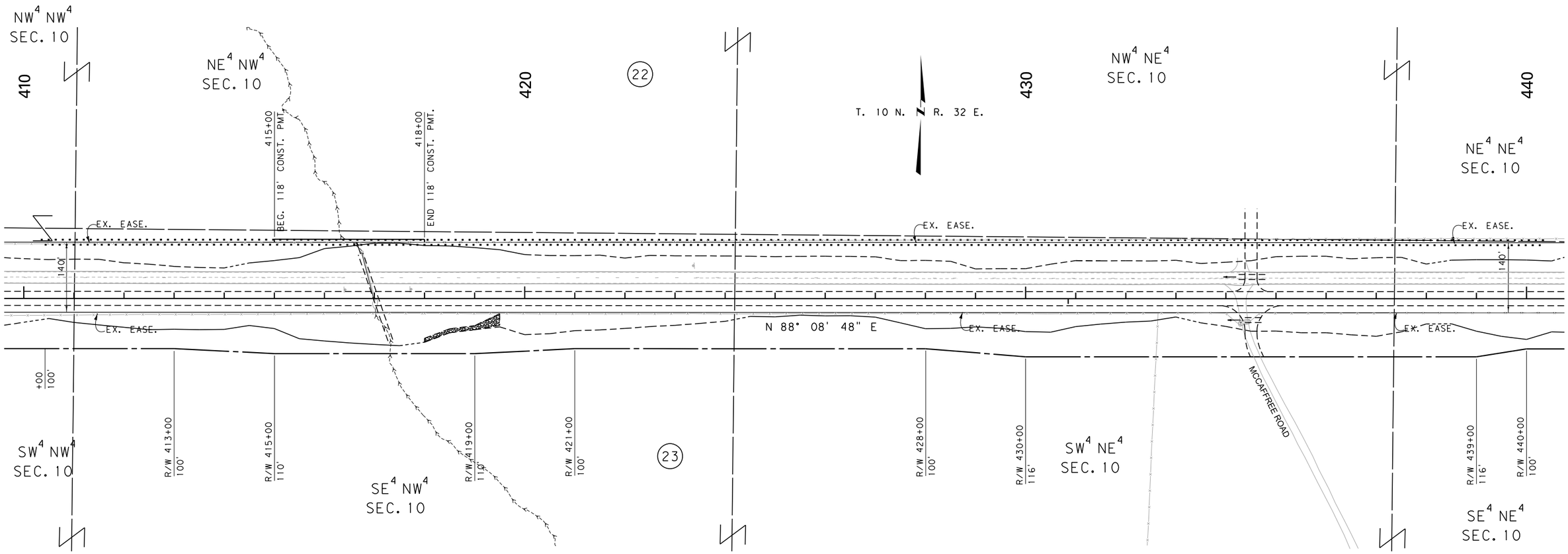

CONSTRUCTION LIMITS	MAP REVISED 12-16-16
CUT SECTION (TOP OF CUT)	
TRANSITION	
TOE OF FILL	
BACKSLOPE LIMITS INCLUDE ROUNDING	FHWA/MDT APPROVAL 8-25-05

3	MDT MONTANA DEPARTMENT OF TRANSPORTATION	C:\DGN\4060roptn005.dgn
2		5/2/2022
1		10:25:50 AM CPS - U6576

NOTES:
1. THE PROPOSED R/W LINE WHERE A SPIRAL CURVE TRANSITION IS USED IS A CHORD RATHER THAN A CONCENTRIC CURVE.
2. ALL STATIONS AND OFFSETS FOR R/W BREAKS ARE IN REFERENCE TO THE R/W BASELINE.

FOR EXISTING R/W RETRACEMENT, SEE C.O.S. 0110477

GRID STATE PLANE COORDINATES

THIS IS A STATE PLANE COORDINATE PROJECT. ALL DIMENSIONS, DISTANCES AND AREAS ON THIS PROJECT ARE GRID, EXCEPT FOR THE EXISTING R/W WIDTH DIMENSION, WHICH IS RECORD.
THE COMBINATION SCALE FACTOR IS 0.99927047

MONTANA DEPARTMENT OF TRANSPORTATION

RIGHT OF WAY PLAN

ROSEBUD COUNTY

SCALE 1" = 100'

0 50' 100' 200' 300'

STATE	RIGHT OF WAY	SHEET NO.	TOTAL SHEETS
MONTANA		17	22
R/W ID.	STPP 14-5(28)207		
PROJECT NO.	4060-028		

ROSEBUD CO LINE - EAST

SEE SHEET NO. 2 FOR OWNERSHIP NAMES, ADDRESSES, AREAS, ETC.

STA 450+53.24 IS S 1° 17' 56" E
1427.46' FROM THE NW CORNER
OF SECTION 11. FND MDT A.C. MON

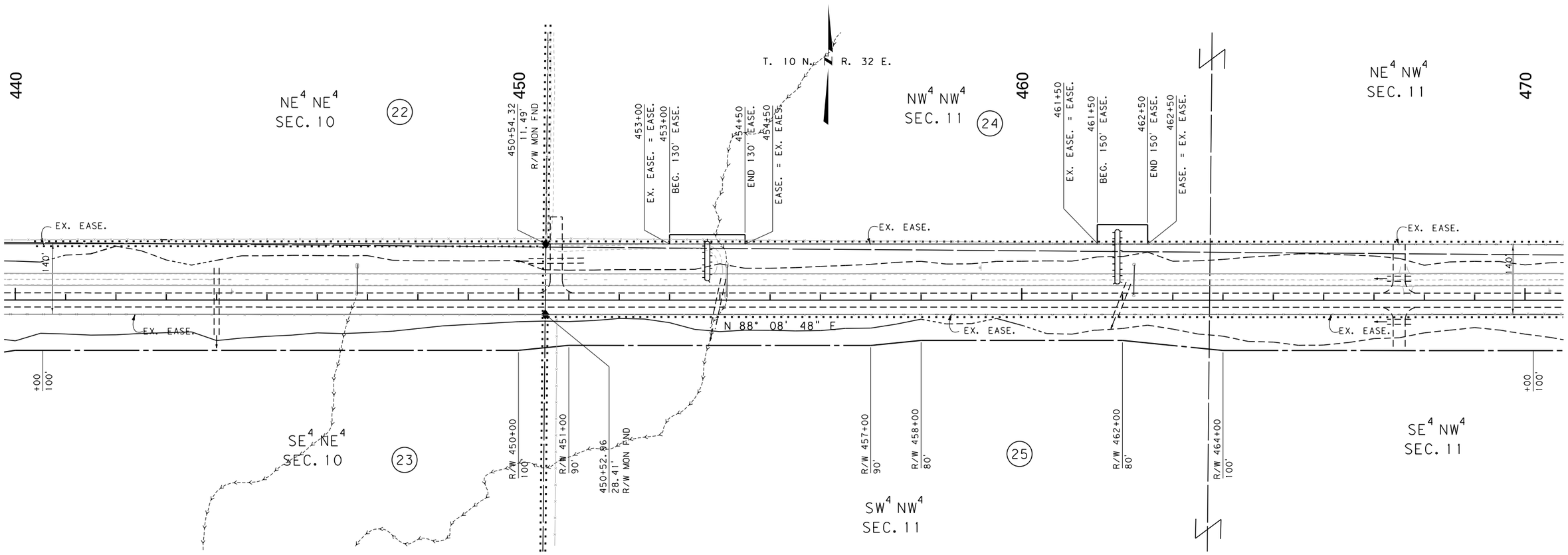

STA 450+53.24 IS N 1° 17' 56" W
1217.04' FROM THE W 1/4 CORNER
OF SECTION 11. FND MDT A.C. MON

CONSTRUCTION LIMITS	MAP REVISED 12-16-16
CUT SECTION (TOP OF CUT)	
TRANSITION	
TOE OF FILL	
BACKSLOPE LIMITS INCLUDE ROUNDING	FHWA/MDT APPROVAL 8-25-05

3	MDT MONTANA DEPARTMENT OF TRANSPORTATION	C:\DGN\4060ropln005.dgn	
2		5/2/2022	
1		10:25:54 AM	CPS - U6576

NOTES:
1. THE PROPOSED R/W LINE WHERE A SPIRAL CURVE TRANSITION IS USED IS A CHORD RATHER THAN A CONCENTRIC CURVE.
2. ALL STATIONS AND OFFSETS FOR R/W BREAKS ARE IN REFERENCE TO THE R/W BASELINE.

FOR EXISTING R/W RETRACEMENT, SEE
C.O.S. 0110477

GRID STATE PLANE COORDINATES

THIS IS A STATE PLANE COORDINATE PROJECT. ALL DIMENSIONS, DISTANCES AND AREAS ON THIS PROJECT ARE GRID, EXCEPT FOR THE EXISTING R/W WIDTH DIMENSION, WHICH IS RECORD.
THE COMBINATION SCALE FACTOR IS 0.99927047

MONTANA DEPARTMENT OF TRANSPORTATION

RIGHT OF WAY PLAN

ROSEBUD COUNTY

SCALE 1" = 100'

0 50' 100' 200' 300'

STATE	RIGHT OF WAY	SHEET NO.	TOTAL SHEETS
MONTANA		18	22
R/W ID.	STPP 14-5(28)207		
PROJECT NO.	4060-028		

ROSEBUD CO LINE - EAST

SEE SHEET NO. 2 FOR OWNERSHIP NAMES, ADDRESSES, AREAS, ETC.

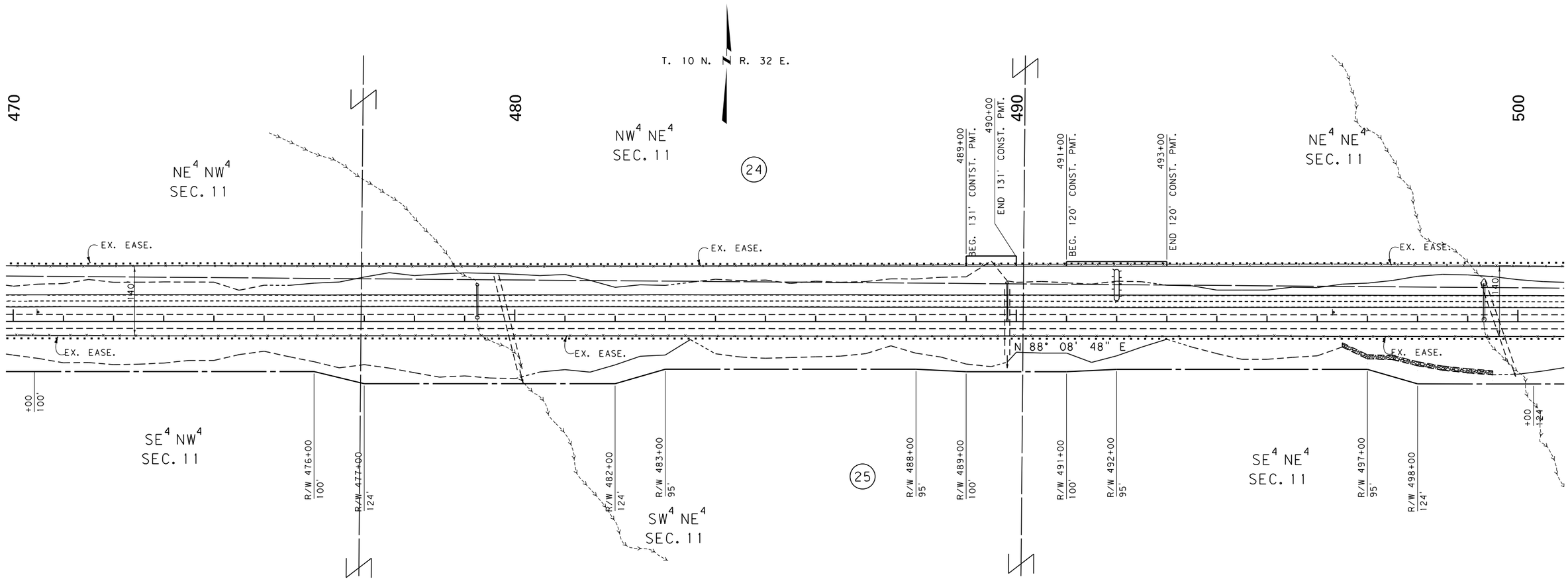

CONSTRUCTION LIMITS	MAP REVISED 12-16-16
CUT SECTION (TOP OF CUT)	
TRANSITION	
TOE OF FILL	
BACKSLOPE LIMITS INCLUDE ROUNDING	FHWA/MDT APPROVAL 8-25-05

3	MDT MONTANA DEPARTMENT OF TRANSPORTATION	C:\DGN\4060ropln006.dgn	
2		5/2/2022	
1		10:26:04 AM	CPS - U6576

NOTES:
1. THE PROPOSED R/W LINE WHERE A SPIRAL CURVE TRANSITION IS USED IS A CHORD RATHER THAN A CONCENTRIC CURVE.
2. ALL STATIONS AND OFFSETS FOR R/W BREAKS ARE IN REFERENCE TO THE R/W BASELINE.

FOR EXISTING R/W RETRACEMENT, SEE
C.O.S. 0110477

GRID STATE PLANE COORDINATES

THIS IS A STATE PLANE COORDINATE PROJECT. ALL DIMENSIONS, DISTANCES AND AREAS ON THIS PROJECT ARE GRID, EXCEPT FOR THE EXISTING R/W WIDTH DIMENSION, WHICH IS RECORD.
THE COMBINATION SCALE FACTOR IS 0.99927047

MONTANA DEPARTMENT OF TRANSPORTATION

RIGHT OF WAY PLAN

ROSEBUD COUNTY

SCALE 1" = 100'

0 50' 100' 200' 300'

STATE	RIGHT OF WAY	SHEET NO.	TOTAL SHEETS
MONTANA		19	22
R/W ID.	STPP 14-5(28)207		
PROJECT NO.	4060-028		

ROSEBUD CO LINE - EAST

SEE SHEET NO. 2 FOR OWNERSHIP NAMES, ADDRESSES, AREAS, ETC.

STA 503+33.74 IS S 1° 24' 30" E
1386.36' FROM THE NE CORNER
OF SECTION 11. FND MDT A.C. MON

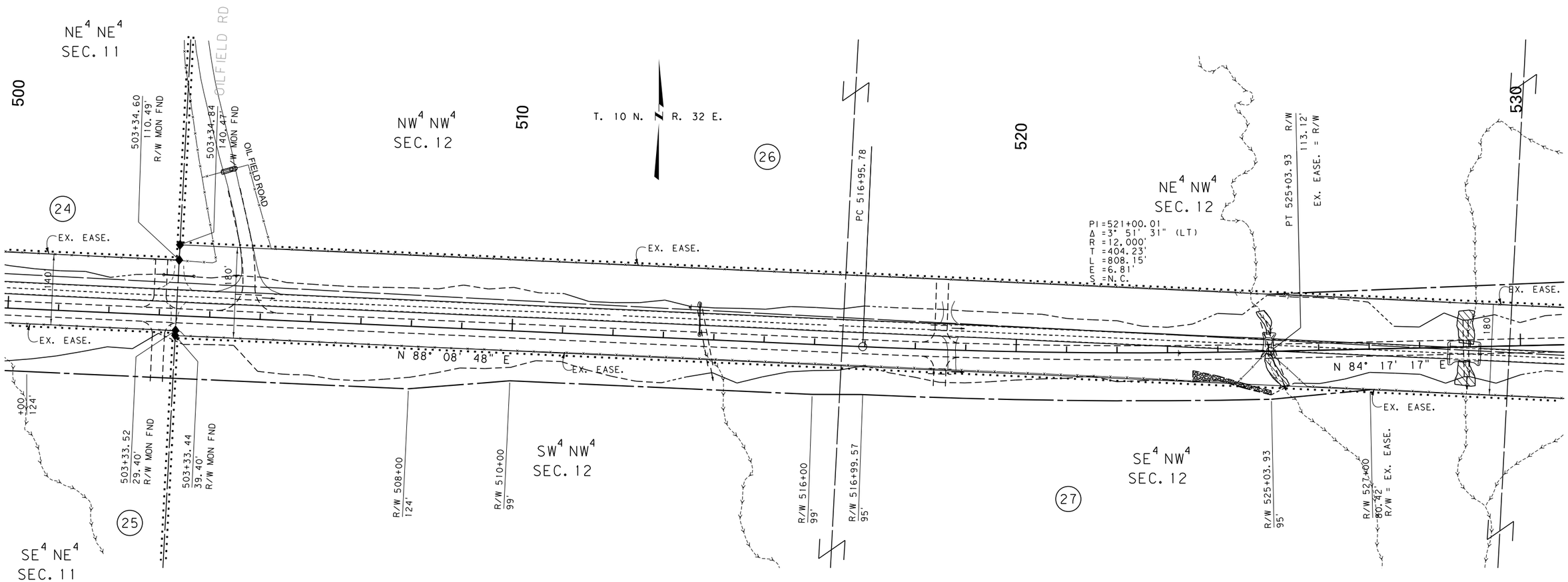

STA 503+33.74 IS N 1° 24' 30" W
1255.76' FROM THE W 1/4 CORNER
OF SECTION 12. FND MDT A.C. MON

CONSTRUCTION LIMITS	MAP REVISED 12-16-16 5-17-17
CUT SECTION — TOP OF CUT	
TRANSITION	
TOE OF FILL	
BACKSLOPE LIMITS INCLUDE ROUNDING	FHWA/MDT APPROVAL 8-25-05

3	MDT MONTANA DEPARTMENT OF TRANSPORTATION	C:\DGN\4060ropln006.dgn
2		5/2/2022
1		10:26:07 AM CPS-U6576

NOTES:
1. THE PROPOSED R/W LINE WHERE A SPIRAL CURVE TRANSITION IS USED IS A CHORD RATHER THAN A CONCENTRIC CURVE.
2. ALL STATIONS AND OFFSETS FOR R/W BREAKS ARE IN REFERENCE TO THE R/W BASELINE.

FOR EXISTING R/W RETRACEMENT, SEE
C.O.S. 0110477

GRID STATE PLANE COORDINATES

THIS IS A STATE PLANE COORDINATE PROJECT. ALL DIMENSIONS, DISTANCES AND AREAS ON THIS PROJECT ARE GRID, EXCEPT FOR THE EXISTING R/W WIDTH DIMENSION, WHICH IS RECORD.
THE COMBINATION SCALE FACTOR IS 0.99927047

MONTANA DEPARTMENT OF TRANSPORTATION

RIGHT OF WAY PLAN

ROSEBUD COUNTY

SCALE 1"=100'

0 50' 100' 200' 300'

STATE	RIGHT OF WAY	SHEET NO.	TOTAL SHEETS
MONTANA		20	22
R/W ID.	STPP 14-5(28)207		
PROJECT NO.	4060-028		

ROSEBUD CO LINE - EAST

SEE SHEET NO. 2 FOR OWNERSHIP NAMES, ADDRESSES, AREAS, ETC.

STA 556+27.55 IS S 1° 26' 05" E
1114.37' FROM THE NE CORNER
OF SECTION 12. FND MDT A.C. MON

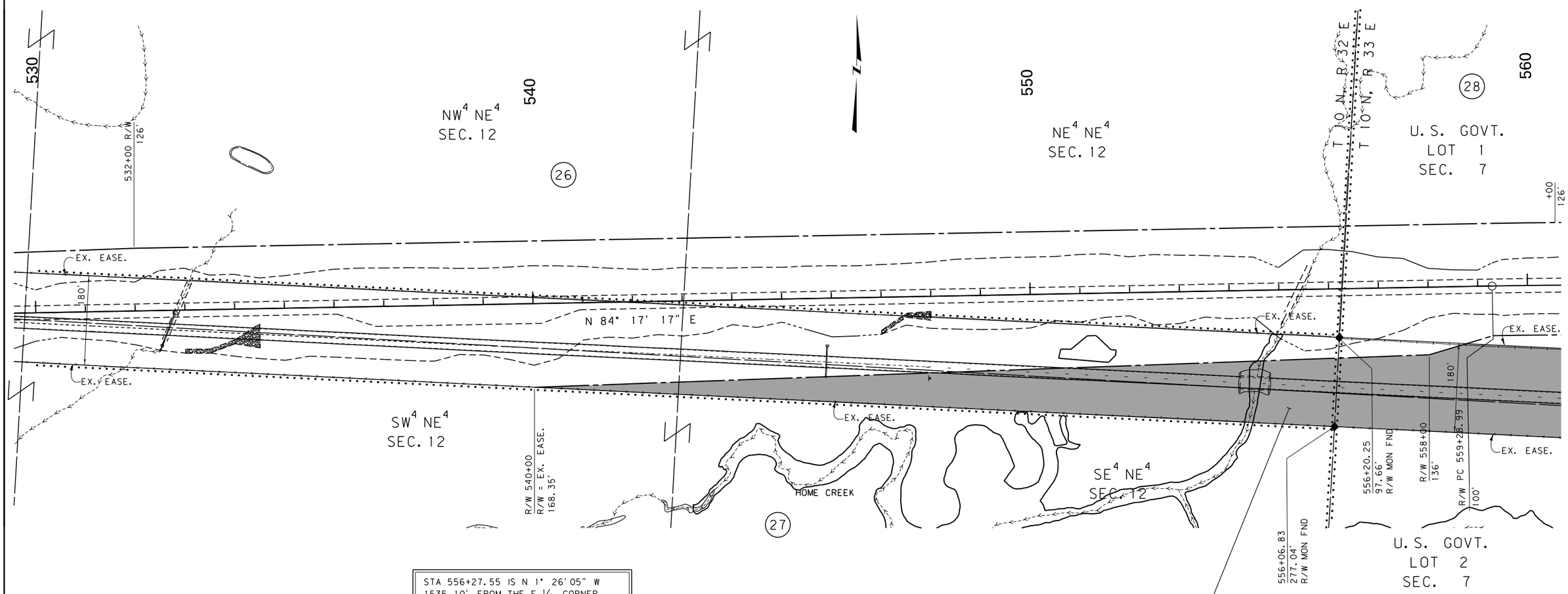

STA 556+27.55 IS N 1° 26' 05" W
1535.10' FROM THE E 1/4 CORNER
OF SECTION 12. FND MDT A.C. MON

PARTIAL DISCHARGE OF EASE.
BY MT DEPT. OF TRANSPORTATION
DOC. NO. 0124341, BOOK 110D, PG 750-754
RECORDED: 3/17/2021

CONSTRUCTION LIMITS	MAP REVISED 12-16-16 5-17-17
CUT SECTION (TOP OF CUT)	
TRANSITION	
TOE OF FILL	
BACKSLOPE LIMITS INCLUDE ROUNDING	FHWA/MDT APPROVAL 8-25-05

3	MDT MONTANA DEPARTMENT OF TRANSPORTATION	C:\DGN\4060ropln006.dgn	
2		5/2/2022	
1		10:26:11 AM	CPS - U6576

NOTES:
1. THE PROPOSED R/W LINE WHERE A SPIRAL CURVE TRANSITION IS USED IS A CHORD RATHER THAN A CONCENTRIC CURVE.
2. ALL STATIONS AND OFFSETS FOR R/W BREAKS ARE IN REFERENCE TO THE R/W BASELINE.

FOR EXISTING R/W RETRACEMENT, SEE
C.O.S. 0110477

GRID STATE PLANE COORDINATES

THIS IS A STATE PLANE COORDINATE PROJECT. ALL DIMENSIONS, DISTANCES AND AREAS ON THIS PROJECT ARE GRID, EXCEPT FOR THE EXISTING R/W WIDTH DIMENSION, WHICH IS RECORD.
THE COMBINATION SCALE FACTOR IS 0.99927047

MONTANA DEPARTMENT OF TRANSPORTATION

RIGHT OF WAY PLAN

ROSEBUD COUNTY

SCALE 1"=100'

0 50' 100' 200' 300'

STATE	RIGHT OF WAY	SHEET NO.	TOTAL SHEETS
MONTANA		21	22
R/W ID.	STPP 14-5(28)207		
PROJECT NO.	4060-028		

ROSEBUD CO LINE - EAST

SEE SHEET NO. 2 FOR OWNERSHIP NAMES, ADDRESSES, AREAS, ETC.

PT 579+76.96 IS S 66° 02' 20" E
2596.91' FROM THE NE CORNER
OF SECTION 12. FND MDT A.C. MON

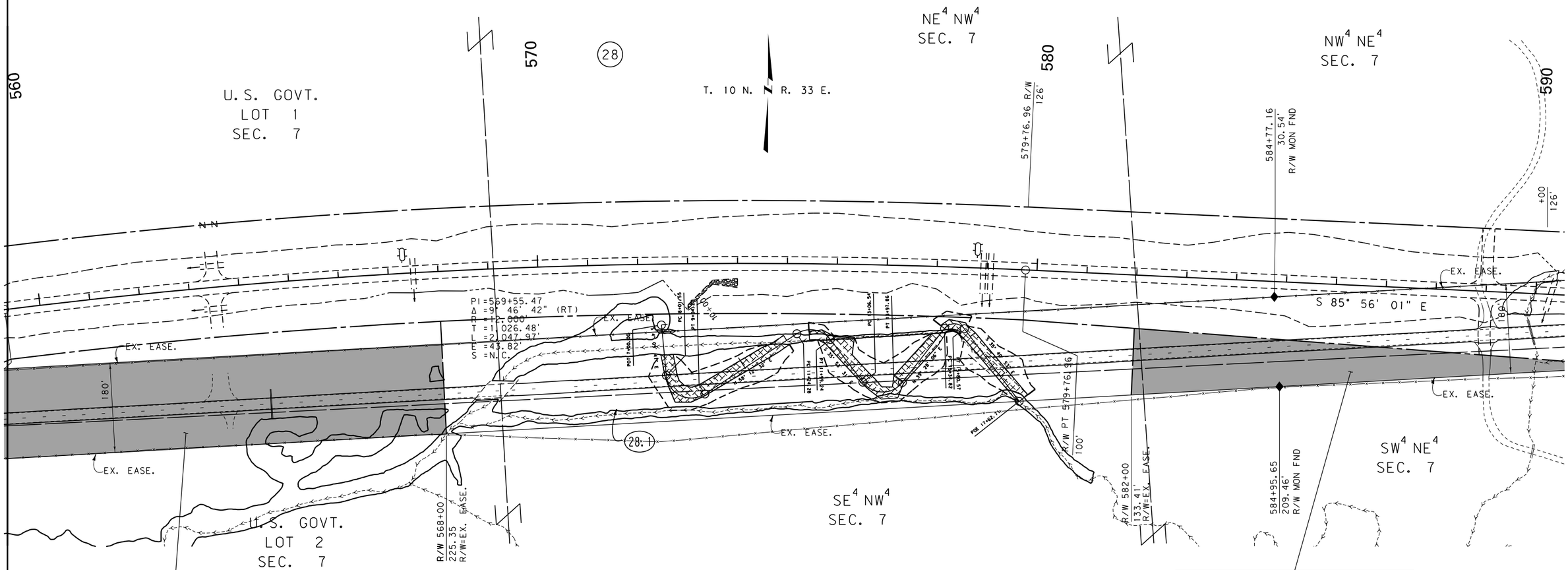

PARTIAL DISCHARGE OF EASE.
BY MT DEPT. OF TRANSPORTATION
DOC. NO. 0124341, BOOK 110D, PG 750-754
RECORDED: 3/17/2021

PT 579+76.96 IS N 55° 21' 19" E
2803.94' FROM THE E ¼ CORNER
OF SECTION 12. FND MDT A.C. MON

PARTIAL DISCHARGE OF EASE.
BY MT DEPT. OF TRANSPORTATION
DOC. NO. 0124341, BOOK 110D, PG 750-754
RECORDED: 3/17/2021

CONSTRUCTION LIMITS	MAP REVISED 12-16-16 5-17-17 3-8-18 10-11-18
CUT SECTION (TOP OF CUT)	
TRANSITION	
TOE OF FILL	
BACKSLOPE LIMITS INCLUDE ROUNDING	FHWA/MDT APPROVAL 8-25-05

3	MDT MONTANA DEPARTMENT OF TRANSPORTATION	C:\DGN\4060rpln007.dgn	
2		5/2/2022	
1		10:26:20 AM	CPS-U6576

NOTES:
1. THE PROPOSED R/W LINE WHERE A SPIRAL CURVE TRANSITION IS USED IS A CHORD RATHER THAN A CONCENTRIC CURVE.
2. ALL STATIONS AND OFFSETS FOR R/W BREAKS ARE IN REFERENCE TO THE R/W BASELINE.

FOR EXISTING R/W RETRACEMENT, SEE
C.O.S. 0110477

GRID STATE PLANE COORDINATES

THIS IS A STATE PLANE COORDINATE PROJECT. ALL DIMENSIONS, DISTANCES AND AREAS ON THIS PROJECT ARE GRID, EXCEPT FOR THE EXISTING R/W WIDTH DIMENSION, WHICH IS RECORD.
THE COMBINATION SCALE FACTOR IS 0.99927047

MONTANA DEPARTMENT OF TRANSPORTATION

RIGHT OF WAY PLAN

ROSEBUD COUNTY

SCALE 1"=100'

0 50' 100' 200' 300'

STATE	RIGHT OF WAY	SHEET NO.	TOTAL SHEETS
MONTANA		22	22
R/W ID.	STPP 14-5(28)207		
PROJECT NO.	4060-028		

ROSEBUD CO LINE - EAST

SEE SHEET NO. 2 FOR OWNERSHIP NAMES, ADDRESSES, AREAS, ETC.

POT 605+63.15 IS S 9° 57' 21" W
1302.72' FROM THE NE CORNER
OF SECTION 7. FND MDT A.C. MON

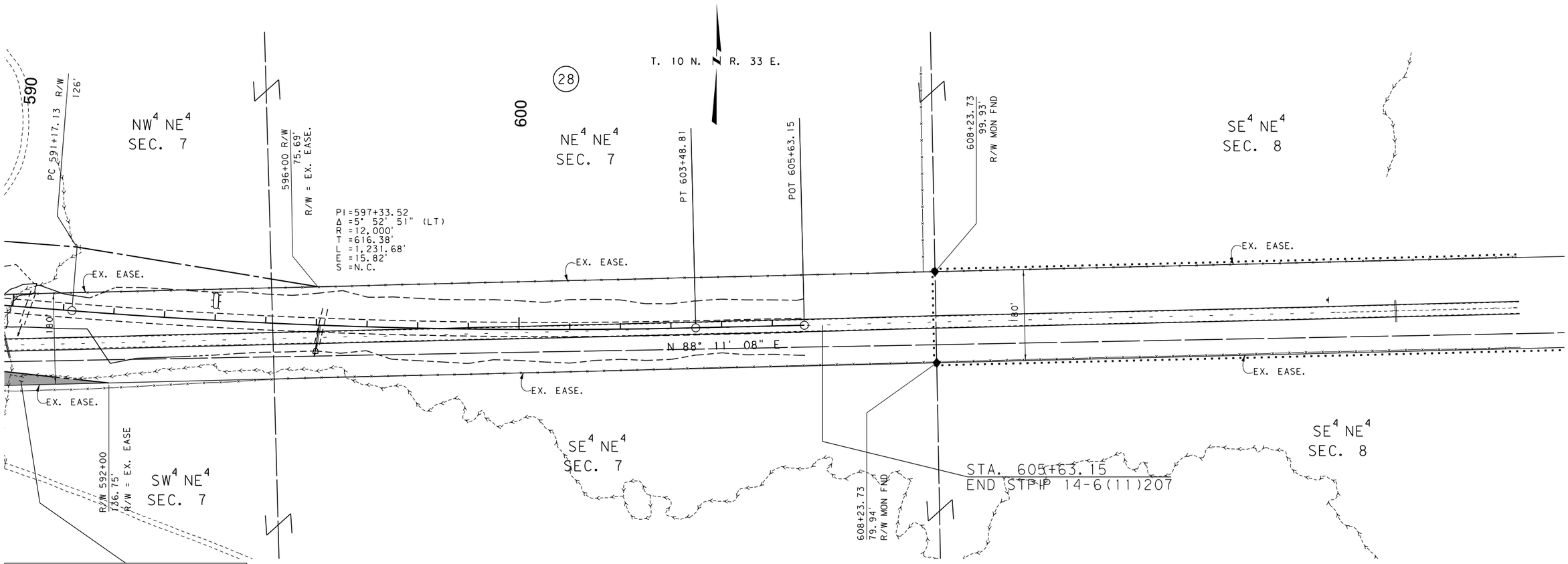

PARTIAL DISCHARGE OF EASE.
BY MT DEPT. OF TRANSPORTATION
DOC. NO. 0124341, BOOK 110D, PG 750-754
RECORDED: 3/17/2021

POT 605+63.15 IS N 12° 19' 24" W
1388.11' FROM THE E 1/4 CORNER
OF SECTION 7. FND MDT A.C. MON

CONSTRUCTION LIMITS	MAP REVISED 12-16-16 5-17-17
CUT SECTION — TOP OF CUT	
TRANSITION	
TOE OF FILL	
BACKSLOPE LIMITS INCLUDE ROUNDING	FHWA/MDT APPROVAL 8-25-05

3	MDT MONTANA DEPARTMENT OF TRANSPORTATION	C:\DGN\4060ropln007.dgn
2		5/2/2022
1		10:26:24 AM CPS - U6576

NOTES:
1. THE PROPOSED R/W LINE WHERE A SPIRAL CURVE TRANSITION IS USED IS A CHORD RATHER THAN A CONCENTRIC CURVE.
2. ALL STATIONS AND OFFSETS FOR R/W BREAKS ARE IN REFERENCE TO THE R/W BASELINE.

FOR EXISTING R/W RETRACEMENT, SEE
C.O.S. 0110477

GRID STATE PLANE COORDINATES

THIS IS A STATE PLANE COORDINATE PROJECT. ALL DIMENSIONS, DISTANCES AND AREAS ON THIS PROJECT ARE GRID, EXCEPT FOR THE EXISTING R/W WIDTH DIMENSION, WHICH IS RECORD.
THE COMBINATION SCALE FACTOR IS 0.99927047

MONTANA DEPARTMENT OF TRANSPORTATION

RIGHT OF WAY PLAN

ROSEBUD COUNTY

SCALE 1"=100'

0 50' 100' 200' 300'