STATE	RIGHT OF WAY	SHEET NO.	TOTAL SHEETS
MONTANA		1	24
R/W ID.	STPS-STPU 225-1(2)0		
PROJECT NO.	4826-002		

2 KM N OF GREAT FALLS - NORTH

MONTANA DEPARTMENT OF TRANSPORTATION

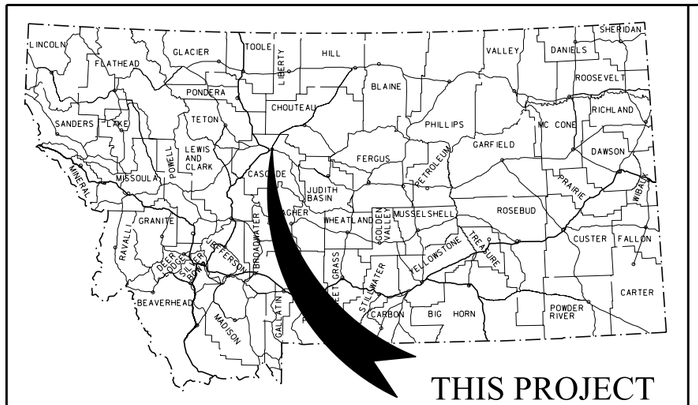

RIGHT OF WAY PLAN

FEDERAL AID PROJECT STPS–STPU 225–1(2)0

2 KM N OF GREAT FALLS – NORTH

CASCADE & CHOUTEAU COUNTIES

LENGTH 11.5 MILES

SEE SHEET NO. 2 - 3 FOR OWNERSHIP NAMES, ADDRESSES, AREAS, ETC.

AN ACCESS CONTROLLED FACILITY

ACCESS CONTROL RESOLUTION IS RECORDED UNDER DOCUMENT NUMBER R0268837 OFFICIAL RECORDS OF CASCADE COUNTY, MONTANA.

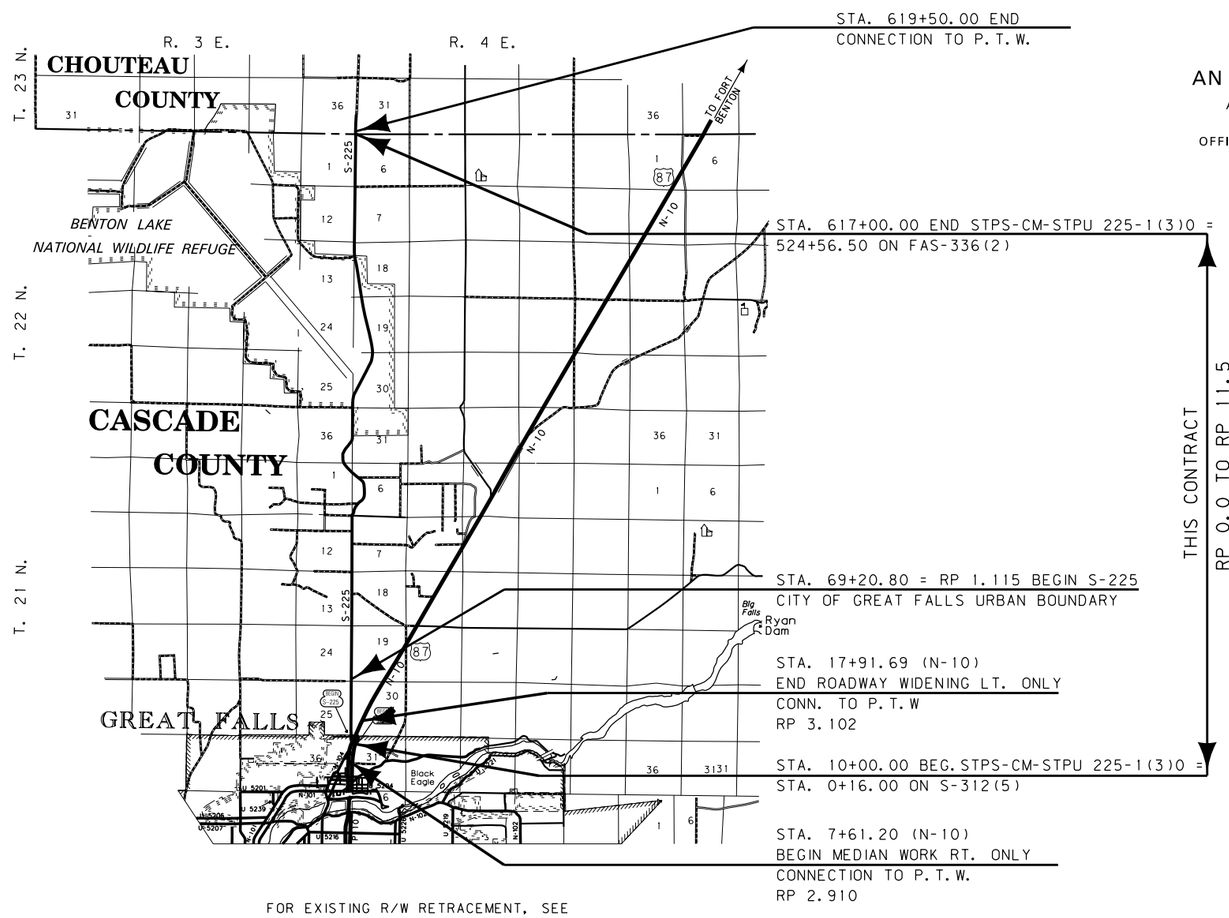

FOR EXISTING R/W RETRACEMENT, SEE C.O.S. NO. S-0004867 & S-0004405

GRID STATE PLANE COORDINATES

THIS IS A STATE PLANE COORDINATE PROJECT. ALL DIMENSIONS, DISTANCES AND AREAS ON THIS PROJECT ARE GRID, EXCEPT FOR THE EXISTING R/W WIDTH DIMENSION, WHICH IS RECORD.
THE COMBINATION SCALE FACTOR IS 0.99928049

PLAN LEGEND

- PROPOSED RIGHT OF WAY LINE
- EXISTING RIGHT OF WAY LINE
- RAILROAD RIGHT OF WAY LINE
- RIGHT OF WAY BASELINE
- STK'D CENTERLINE
- SECTION LINE
- OWNERSHIP BOUNDARY
- FULL ACCESS CONTROL (AC)
- LIMITED ACCESS CONTROL
- EXISTING FULL ACCESS CONTROL (EFAC)
- EXISTING LIMITED ACCESS CONTROL (ELAC)
- PRESENT TRAVELED WAY (P.T.W.)
- FENCE LINE
- EXISTING GUARDRAIL
- PROPOSED GUARDRAIL
- GATE IN FENCE
- CATTLE GUARD: EXIST. - PROPOSED
- SECTION CORNER (FOUND / UNFOUND)
- ¼ SECTION CORNER
- CLOSING CORNER
- MEANDER CORNER
- CENTER OF SECTION
- 1/16 SECTION CORNER FOUND
- RIGHT OF WAY MONUMENT (FOUND / CALCULATED)
- PROPERTY CORNER PIN
- POWER POLE IN PLACE
- TELEPHONE POLE IN PLACE
- TELEGRAPH POLE IN PLACE
- LIGHT POLE
- PROPOSED CULVERT
- EXISTING CULVERT
- OUTLET DITCH
- INLET DITCH
- EXISTING DITCH
- CHANNEL CHANGES (CH. CH.)
- DITCH BLOCK
- RIPRAP
- BRIDGES
- RAILROADS
- PARCEL NUMBERS (2)
- APPROACH: EXIST.- PROPOSED

ASSOCIATED PROJECTS
STPS-STPU 225-1(1)0 PE

RELATED PROJECTS
S 312(4)
S 312(2)
FAP 312
S 336(2)
FAP 336
F 149(13)

CONSTRUCTION LIMITS
CUT SECTION (TOP OF CUT)
TRANSITION
TOE OF FILL
BACKSLOPE LIMITS INCLUDE ROUNDING

MAP REVISED 10-18-13

FHWA/MDT APPROVAL 12-28-12

3
2
1

MDT MONTANA DEPARTMENT OF TRANSPORTATION

c:\dgn\4826rotl001.dgn
1/29/2014
10:55:01 AM CPS - U1068

STATE	RIGHT OF WAY	SHEET NO.	TOTAL SHEETS
MONTANA		2	24
R/W ID.	STPS-STPU 225-1(2)0		
PROJECT NO.	4826-002		

2 KM N OF GREAT FALLS - NORTH

OWNERSHIP

PARCEL	NAME	ADDRESS	TOTAL AREA	GROSS R/W AREA	EX. EASE. AREA	NET AREA	REMAINDER LEFT	REMAINDER RIGHT	CONST. PMT. AREA	EASEMENT AREA	SHEET NO.
% 1	JOHN W & JENNIFER R LISTON	509 BOOTLEGGER TRAIL, GREAT FALLS, MT 59404	8.96 AC	8.96 AC		8.96 AC					12,13
* 2	DONNY L & DARLA M VOLK	3304 12TH STREET NE, GREAT FALLS, MT 59404	1.68 AC	0.05 AC		0.05 AC					4
2A	DONNY L & DARLA M VOLK	1105 40TH AVENUE NE, GREAT FALLS, MT 59404	ACCESS CONTROL ONLY								4
3	MICHAEL J & JOAN M ANDERSON	2039 POLY DRIVE, BILLINGS, MT 59102	4.13 AC	0.02 AC		0.02 AC					4
4	DAREN J VICK	132 SKYLINE DRIVE NE, GREAT FALLS, MT 59404	ACCESS CONTROL ONLY								4
5	DONNY VOLK, D/B/A SPORTMENS WILD GAME	1105 40TH AVENUE NE, GREAT FALLS, MT 59404	ACCESS CONTROL ONLY								4
	PROCESSING										
6	NORA PETERSEN	PO BOX 2905, GREAT FALLS, MT 59403	5.00 AC	0.02 AC		0.02 AC			0.07 AC		4
7	ABRAHAM DIVESTITURE COMPANY, LLC	C/O AT&T NETWORK REAL ESTATE ADMINIST. 12555	ACCESS CONTROL ONLY								4
		CINGULAR WAY, STE 1300, ALPHARETTA, GA 30004									
8	JAMES WRAY PERETTI, ETAL	2409 6TH ST NW, GREAT FALLS, MT 59404	160.00+ AC	2.13 AC		2.13 AC			0.08 AC		4 - 6
9	CCR-GREAT FALLS III, LLC	501 S CHERRY ST, STE 480, DENVER, CO 80246	12.55 AC	0.01 AC		0.01 AC					4
10	HERTHA A CHAMBERLAIN TRUST	5008 RASHELLE WAY, SAN RAMON, CA 94582	82.15 AC	0.20 AC		0.20 AC			0.65 AC	0.03 AC	4,5
	C/D STONE MEADOWS, INC	104 2ND ST S, SUITE 201, GREAT FALLS, MT 59401									
11	MBA CONSULTANTS INC	1954 HIGHWAY 16, GLENDIVE, MT 59330	5.92 AC						0.09 AC	0.01 AC	5
12	CITY OF GREAT FALLS	PO BOX 5021, GREAT FALLS, MT 59403	11.14 AC						0.05 AC		5
13	MBA CONSULTANTS INC	1954 HIGHWAY 16, GLENDIVE, MT 59330	160.00+ AC						0.10 AC		5
14	ALOYSIUS DIEKHANS	PO BOX 508, BLACK EAGLE, MT 59414	ACCESS CONTROL ONLY								5
15	FRONT RANGE PIPELINE LLC	803 HIGHWAY 212 S, LAUREL, MT 59044	ACCESS CONTROL ONLY								5,6
16	NORTHWESTERN CORPORATION	40 E BROADWAY, BUTTE, MT 59701	3.95 AC	0.17 AC		0.17 AC			0.05 AC		5,6
17	ALOYSIUS DIEKHANS	PO BOX 508, BLACK EAGLE, MT 59414	160.00+ AC						0.17 AC		6
18	BALLARD FARMS, LLC	3521 DARBY RD, FLOWEREE, MT 59440	160.00+ AC	1.00 AC		1.00 AC			0.02 AC		6 - 8
19	DARLA DOYLE & ROBERT HEIHN	PO BOX 436, BLACK EAGLE, MT 59414	112.87 AC	0.79 AC		0.79 AC					6,7
20	BALLARD FARMS, LLC	3521 DARBY RD, FLOWEREE, MT 59440	160.00+ AC	0.84 AC		0.84 AC					7,8
21	SCOTT L & DONNA M BENEDICT	2909 WELLS FARGO DR, GREAT FALLS, MT 59404	139.64 AC	0.60 AC		0.60 AC					8,9
22	MOUNTAIN PATROL OF MONTANA	PO BOX 2801, GREAT FALLS, MT 59403	FOR NEGOTIATIONS ONLY								8
23	BARRY J GALLAGHER & SHERRY LACEY-GALLAGHER	141 BOOTLEGGER LATERAL, GREAT FALLS, MT 59404	19.40 AC	0.16 AC		0.16 AC					8
24	DREW A HEDRICK & LYNN ULMER OATMAN	807 8TH AVE S, GREAT FALLS, MT 59405	OWNER NOTIFICATION ONLY								8,9
25	THOMAS M & ANNETTE M OSTLIE	143 BOOTLEGGER LATERAL, GREAT FALLS, MT 59404	OWNER NOTIFICATION ONLY								8,9
26	JASON G & CASSANDRA L FUHRMAN	303 BOOTLEGGER TRAIL, GREAT FALLS, MT 59404	FOR NEGOTIATIONS ONLY								9
27	ZACHARY & MEGAN MILLER	299 BOOTLEGGER TRAIL, GREAT FALLS, MT 59404	4.22 AC						0.11 AC		9
28	EMMANUEL G & SANDRA L MARGARIS	307 BOOTLEGGER TRAIL, GREAT FALLS, MT 59404	23.19 AC	# 0.19 AC		# 0.19 AC					9
29	ALLEN & LESLIE R STEENSRUD	1 RED DEER LN, GREAT FALLS, MT 59404	20.03 AC	0.10 AC		0.10 AC			0.15 AC		9
30	MELCHISEDEK L & BARBARA LYNN MARGARIS	3400 12TH AVE S, GREAT FALLS, MT 59405	35.13 AC	0.82 AC		0.82 AC					9
31	SPENCER & VICKIE L WORKMAN	342 BOOTLEGGER TRAIL, GREAT FALLS, MT 59404	25.79 AC	0.21 AC		0.21 AC					9,10
32	SHARON K & JOSEPH L HORNER, JR	PO BOX 501, BLACK EAGLE, MT 59414	17.98 AC	0.31 AC		0.31 AC			0.20 AC		9,10
33	SHAWN T NESBO	348 BOOTLEGGER TRAIL, GREAT FALLS, MT 59404	68.19 AC	0.51 AC		0.51 AC			0.25 AC		10
34	LADONNA S LONEY	20 CHANDELLE LANE, GREAT FALLS, MT 59404	20.10 AC	0.28 AC		0.28 AC					10
35	UNIVERSITY OF GREAT FALLS	1301 20TH STREET S, GREAT FALLS, MT 59405	15.00 AC	1.10 AC		1.10 AC			0.08 AC		10,11
36	DIANE WALKER	123 WALKER LANE, FLOWEREE, MT 59440	FOR NEGOTIATIONS ONLY								24
37	STEVEN A BLINCO	PO BOX 7434, GREAT FALLS, MT 59406	10.00 AC	0.03 AC		0.03 AC			0.08 AC		10,11
38	GEORGE O & IDA J STACHE	419 BOOTLEGGER TRAIL, GREAT FALLS, MT 59404	10.53 AC	0.51 AC		0.51 AC			0.17 AC		11
39	BENJAMIN E IVES & PATSY M STENSAKER	PO BOX 263, BLACK EAGLE, MT 59414	OWNER NOTIFICATION ONLY								11

RIGHT-OF-WAY COORDINATE ASCII FILES

R/W BREAK COORDS: 4826ROBRK001.TXT
R/W BASELINE COORDS: 4826ROBAS001.TXT
ALL FILES ARE LOCATED ON THE CADD SERVER IN THE RO DIRECTORY, UNDER PROJECT: 4826

% PARCEL 1 AUTHORIZED FOR ADVANCED ACQUISITION 4-30-04
* PARCEL 2 AUTHORIZED FOR ADVANCED ACQUISITION 8-14-08
# TO BE ACQUIRED AS EASEMENT

CONSTRUCTION LIMITS
CUT SECTION (TOP OF CUT)
TRANSITION
TOE OF FILL
BACKSLOPE LIMITS INCLUDE ROUNDING

MAP REVISED 7-23-13 9-25-13 10-18-13 11-18-13 11-25-13 1-14-14 1-23-14

FHWA/MDT APPROVAL 12-28-12

MDT MONTANA DEPARTMENT OF TRANSPORTATION

c:\dgn\4826roown001.dgn
1/29/2014
10:55:11 AM CPS - U1068

NOTES:
1. THE PROPOSED R/W LINE WHERE A SPIRAL CURVE TRANSITION IS USED IS A CHORD RATHER THAN A CONCENTRIC CURVE.
2. ALL STATIONS AND OFFSETS FOR R/W BREAKS ARE IN REFERENCE TO THE R/W BASELINE.

FOR EXISTING R/W RETRACEMENT, SEE C.O.S. NO. S-0004867 & S-0004405

GRID STATE PLANE COORDINATES

THIS IS A STATE PLANE COORDINATE PROJECT. ALL DIMENSIONS, DISTANCES AND AREAS ON THIS PROJECT ARE GRID, EXCEPT FOR THE EXISTING R/W WIDTH DIMENSION, WHICH IS RECORD.
THE COMBINATION SCALE FACTOR IS 0.99928049

MONTANA DEPARTMENT OF TRANSPORTATION
RIGHT OF WAY PLAN
CASCADE & CHOUTEAU COUNTIES

STATE	RIGHT OF WAY	SHEET NO.	TOTAL SHEETS
MONTANA		3	24
R/W ID.	STPS-STPU 225-1(2)0		
PROJECT NO.	4826-002		

2 KM N OF GREAT FALLS - NORTH

OWNERSHIP

PARCEL	NAME	ADDRESS	TOTAL AREA	GROSS R/W AREA	EX. EASE. AREA	NET AREA	REMAINDER LEFT	REMAINDER RIGHT	CONST. PMT. AREA	EASEMENT AREA	SHEET NO.
40	DENNIS & JERI LYNN SILLER	10 COVE LANE, GREAT FALLS, MT 59404	OWNER NOTIFICATION ONLY								11
41	HOMESTEAD ACRES COUNTY WATER AND SEWER	15 E COUNTRY LANE, GREAT FALLS, MT 59404	9.61 AC	0.03 AC		0.03 AC					11
	DISTRICT										
42	RONELDA MOGSTAD	3202 14TH AVE S, GREAT FALLS, MT 59405	20.00 AC						0.08 AC		11,12
43	ATHENA L BARACKER	461 BOOTLEGGER TRAIL, GREAT FALLS, MT 59404	9.42 AC	0.40 AC		0.40 AC			0.11 AC		11,12
44	EDWARD J & PATRICIA V STAHLER	465 BOOTLEGGER TRAIL, GREAT FALLS, MT 59404	4.80 AC	0.10 AC		0.10 AC			0.30 AC	0.03 AC	12
45	GARY A & BOBBIE L SHULAR	484 BOOTLEGGER TRAIL, GREAT FALLS, MT 59404	26.84 AC	0.93 AC		0.93 AC					12
46	LANCE Z HAYMAKER	497 BOOTLEGGER TRAIL, GREAT FALLS, MT 59404	4.80 AC	0.15 AC		0.15 AC			0.13 AC	0.12 AC	12
47	THOMAS F & JANET K THOMPSON	1 LAKE FLAT LN, GREAT FALLS, MT 59404	4.80 AC	0.09 AC		0.09 AC			0.21 AC		12
48	STEVEN C & DEBORAH A McNEESE	505 BOOTLEGGER TRAIL, GREAT FALLS, MT 59404	10.54 AC	0.11 AC		0.11 AC			0.23 AC		12
49	ALLEN P BROOKS	16 DENNIS LANE, GREAT FALLS, MT 59404	10.00 AC	0.07 AC		0.07 AC					12,13
50	THOMAS M DENNIS	548 BOOTLEGGER TRAIL, GREAT FALLS, MT 59404	9.45 AC	0.35 AC		0.35 AC					12,13
51	JACQUELINE J REA	568 BOOTLEGGER TRAIL, GREAT FALLS, MT 59404	20.07 AC	0.19 AC		0.19 AC					13
52	STATE OF MONTANA		160.00+ AC						0.01 AC		13 - 15
53	MARK D MALLORY & JENNIFER E ROWELL	577 BOOTLEGGER TRAIL, GREAT FALLS, MT 59404	FOR NEGOTIATIONS ONLY								14
54	ROBERT E NEWHALL	925 2ND AVE SW, GREAT FALLS, MT 59404	OWNER NOTIFICATION ONLY								14
55	UNITED STATES OF AMERICA		160.00+ AC						0.09 AC		14 - 20
56	ROBERT L KROPP	700 BLACK HORSE LAKE RD, FLOWEREE, MT 59440	FOR NEGOTIATIONS ONLY								20
57	HENRY M KROPP & ROBERT L KROPP	700 BLACK HORSE LAKE RD, FLOWEREE, MT 59440	FOR NEGOTIATIONS ONLY								20,21
58	DAVID E & SHIRLEY A SHANE, CO-TRUSTEES OF THE	673 BLACK HORSE LAKE RD, FLOWEREE, MT 59440	FOR NEGOTIATIONS ONLY								20,21
	DAVID E SHANE REVOCABLE TRUST, U/A/D 8-18-77										
	& SHIRLEY A SHANE REVOCABLE TRUST, U/A/D 8-18-77										
59	ROBERT L KROPP	700 BLACK HORSE LAKE RD, FLOWEREE, MT 59440	160.00+ AC							0.06 AC	21 - 23
60	HENRY M KROPP	700 BLACK HORSE LAKE RD, FLOWEREE, MT 59440	FOR NEGOTIATIONS ONLY								21,22
61	BRENT B MACDONALD	1250 ANDERSON LANE, FLOWEREE, MT 59440	OWNER NOTIFICATION ONLY								22 - 24
62	DAVID E & KAREL R SHANE, AS CO-TRUSTEES OF THE	673 BLACK HORSE LAKE RD, FLOWEREE, MT 59440	FOR NEGOTIATIONS ONLY								23,24
	HELEN E SHANE GIFT TRUST FOR DAVID & DAVID E										
	& SHIRLEY A SHANE, AS CO-TRUSTEES OF THE DAVID										
	E SHANE & SHIRLEY A SHANE REVOCABLE TRUSTS										
63	LOIS J SCHAFER, ET AL	4274 PROMISED LAND RD, GREAT FALLS, MT 59404	FOR NEGOTIATIONS ONLY								24
64	KAYLENE M STRUTZ	64 BOOTLEGGER TRAIL, GREAT FALLS, MT 59404	ACCESS CONTROL ONLY								5
53.1	RANDALL L & BECKY J McDANIEL	512 51ST STREET S, GREAT FALLS, MT 59405	FOR NEGOTIATIONS ONLY								14

CONSTRUCTION LIMITS
CUT SECTION (TOP OF CUT)
TRANSITION
TOE OF FILL
BACKSLOPE LIMITS INCLUDE ROUNDING

MAP REVISED 7-23-13 8-30-13 9-25-13 10-18-13 11-18-13 1-14-14 1-29-14

FHWA/MDT APPROVAL 12-28-12

3
2
1

MDT MONTANA DEPARTMENT OF TRANSPORTATION

c:\dgn\4826roown001.dgn
1/29/2014
10:55:15 AM CPS-U1068

NOTES:
1. THE PROPOSED R/W LINE WHERE A SPIRAL CURVE TRANSITION IS USED IS A CHORD RATHER THAN A CONCENTRIC CURVE.
2. ALL STATIONS AND OFFSETS FOR R/W BREAKS ARE IN REFERENCE TO THE R/W BASELINE.

FOR EXISTING R/W RETRACEMENT, SEE
C.O.S. NO. S-0004867 & S-0004405

GRID STATE PLANE COORDINATES

THIS IS A STATE PLANE COORDINATE PROJECT. ALL DIMENSIONS, DISTANCES AND AREAS ON THIS PROJECT ARE GRID, EXCEPT FOR THE EXISTING R/W WIDTH DIMENSION, WHICH IS RECORD.
THE COMBINATION SCALE FACTOR IS 0.99928049

MONTANA DEPARTMENT OF TRANSPORTATION
RIGHT OF WAY PLAN
CASCADE & CHOUTEAU COUNTIES

STATE	RIGHT OF WAY	SHEET NO.	TOTAL SHEETS
MONTANA		4	24
R/W ID.	STPS-STPU 225-1(2)0		
PROJECT NO.	4826-002		

2 KM N OF GREAT FALLS - NORTH

SEE SHEET NO. 2 FOR OWNERSHIP NAMES, ADDRESSES, AREAS, ETC.

ROAD APPROACHES

PARCEL SERVED		FARM FIELD (1), (2)	PRIVATE (2)	PUBLIC	
	SIDE	STATION	STATION	SIDE	STATION
3	LT		12+10		
2, 2A	RT		12+78		
2, 2A	RT		14+75		
				LT	14+79
6	RT		16+77		
7	LT		16+77		
				LT	30+28
				LT	36+81
9	LT		22+80		

* JOINT USE WITH OTHER PARCEL AT SAME STATION

(1) FARM FIELD APPROACH FOR AGRICULTURAL USE ONLY
(2) ROAD APPROACH LOCATIONS FIXED

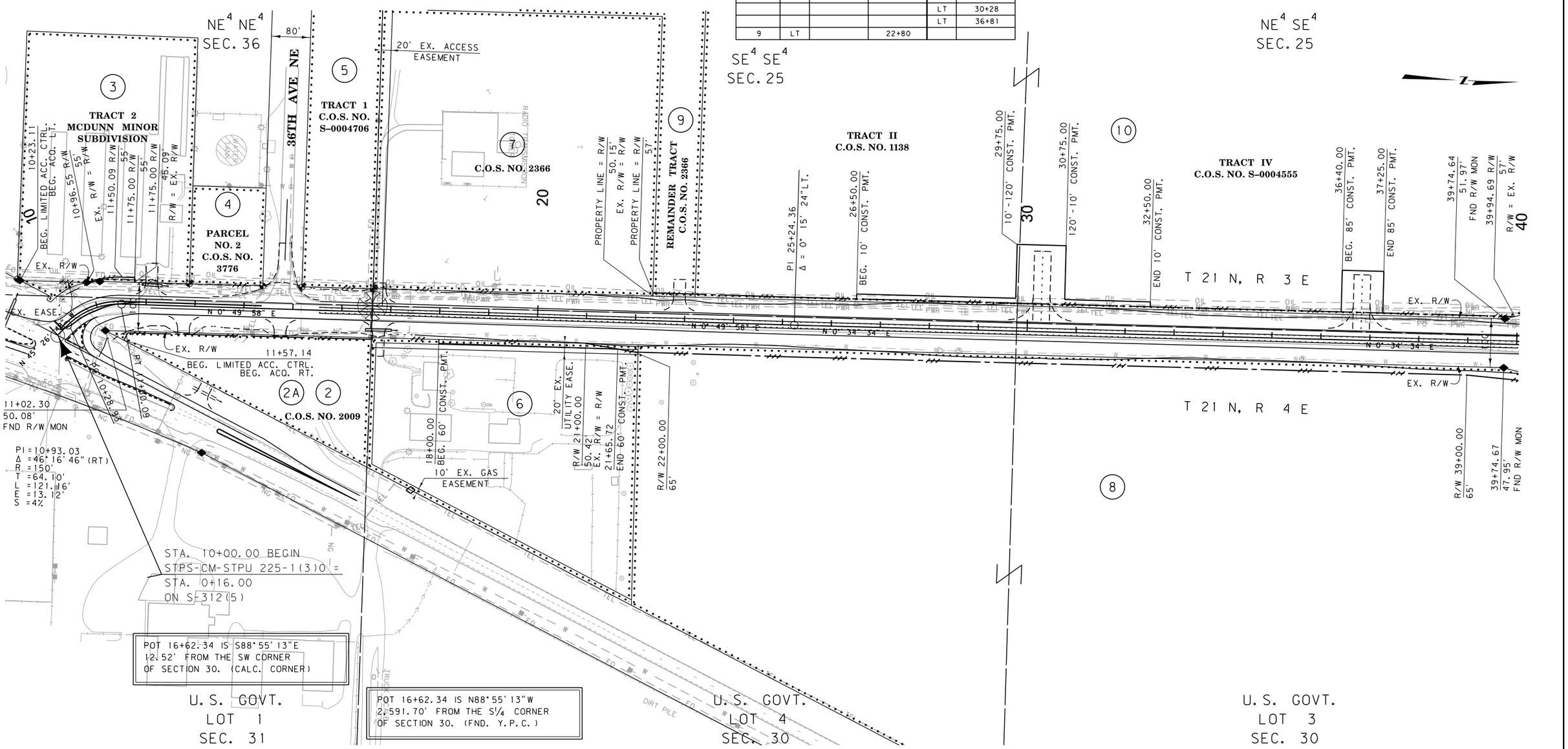

CONSTRUCTION LIMITS	MAP REVISED 7-23-13 9-25-13 10-18-13 11-18-13 1-23-14
CUT SECTION (TOP OF CUT)	
TRANSITION	
TOE OF FILL	
BACKSLOPE LIMITS INCLUDE ROUNDING	FHWA/MDT APPROVAL 12-28-12

3
2
1

MDT MONTANA DEPARTMENT OF TRANSPORTATION

c:\dgn\4826ropln001.dgn
1/29/2014
10:56:25 AM CPS-U1068

NOTES:
1. THE PROPOSED R/W LINE WHERE A SPIRAL CURVE TRANSITION IS USED IS A CHORD RATHER THAN A CONCENTRIC CURVE.
2. ALL STATIONS AND OFFSETS FOR R/W BREAKS ARE IN REFERENCE TO THE R/W BASELINE.

FOR EXISTING R/W RETRACEMENT, SEE
C.O.S. NO. S-0004867 & S-0004405

GRID STATE PLANE COORDINATES

THIS IS A STATE PLANE COORDINATE PROJECT. ALL DIMENSIONS, DISTANCES AND AREAS ON THIS PROJECT ARE GRID, EXCEPT FOR THE EXISTING R/W WIDTH DIMENSION, WHICH IS RECORD.
THE COMBINATION SCALE FACTOR IS 0.99928049

MONTANA DEPARTMENT OF TRANSPORTATION

RIGHT OF WAY PLAN

CASCADE COUNTY

SCALE 1" = 100'

0 50' 100' 200' 300'

STATE	RIGHT OF WAY	SHEET NO.	TOTAL SHEETS
MONTANA		5	24
R/W ID.	STPS-STPU 225-1(2)0		
PROJECT NO.	4826-002		

2 KM N OF GREAT FALLS - NORTH

ROAD APPROACHES

PARCEL SERVED		FARM FIELD (1), (2)	PRIVATE (2)	PUBLIC	
	SIDE	STATION	STATION	SIDE	STATION
10, 11, 64	LT		42+80		
				LT	49+36
				LT	56+44
8, 16	RT	69+24			
14, 15	LT		69+31		

* JOINT USE WITH OTHER PARCEL AT SAME STATION

(1) FARM FIELD APPROACH FOR AGRICULTURAL USE ONLY
(2) ROAD APPROACH LOCATIONS FIXED

SEE SHEET NO. 2-3 FOR OWNERSHIP NAMES, ADDRESSES, AREAS, ETC.

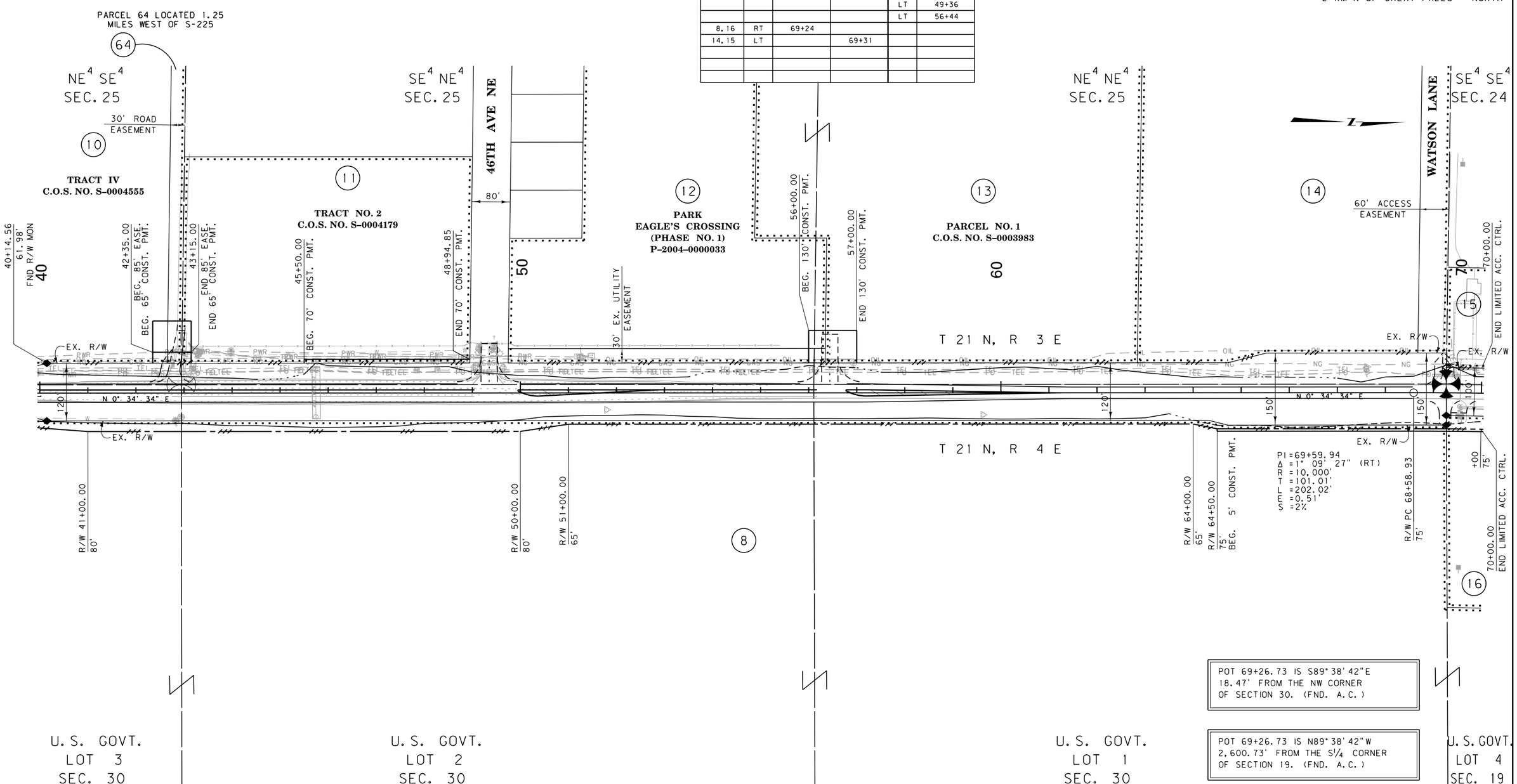

POT 69+26.73 IS S89°38'42"E 18.47' FROM THE NW CORNER OF SECTION 30. (FND. A.C.)

POT 69+26.73 IS N89°38'42"W 2,600.73' FROM THE S1/4 CORNER OF SECTION 19. (FND. A.C.)

CONSTRUCTION LIMITS	MAP REVISED 7-23-13 10-18-13
CUT SECTION (TOP OF CUT)	
TRANSITION	
TOE OF FILL	
BACKSLOPE LIMITS INCLUDE ROUNDING	FHWA/MDT APPROVAL 12-28-12

3	MDT MONTANA DEPARTMENT OF TRANSPORTATION	c:\dgn\4826ropln001.dgn
2		1/29/2014
1		10:56:31 AM CPS-U1068

NOTES:
1. THE PROPOSED R/W LINE WHERE A SPIRAL CURVE TRANSITION IS USED IS A CHORD RATHER THAN A CONCENTRIC CURVE.
2. ALL STATIONS AND OFFSETS FOR R/W BREAKS ARE IN REFERENCE TO THE R/W BASELINE.

FOR EXISTING R/W RETRACEMENT, SEE C.O.S. NO. S-0004867 & S-0004405

GRID STATE PLANE COORDINATES

THIS IS A STATE PLANE COORDINATE PROJECT. ALL DIMENSIONS, DISTANCES AND AREAS ON THIS PROJECT ARE GRID, EXCEPT FOR THE EXISTING R/W WIDTH DIMENSION, WHICH IS RECORD.
THE COMBINATION SCALE FACTOR IS 0.99928049

MONTANA DEPARTMENT OF TRANSPORTATION

RIGHT OF WAY PLAN

CASCADE COUNTY

SCALE 1"=100'

0 50' 100' 200' 300'

STATE	RIGHT OF WAY	SHEET NO.	TOTAL SHEETS
MONTANA		6	24
R/W ID.	STPS-STPU 225-1(2)0		
PROJECT NO.	4826-002		

2 KM N OF GREAT FALLS - NORTH

SEE SHEET NO. 2 FOR OWNERSHIP NAMES, ADDRESSES, AREAS, ETC.

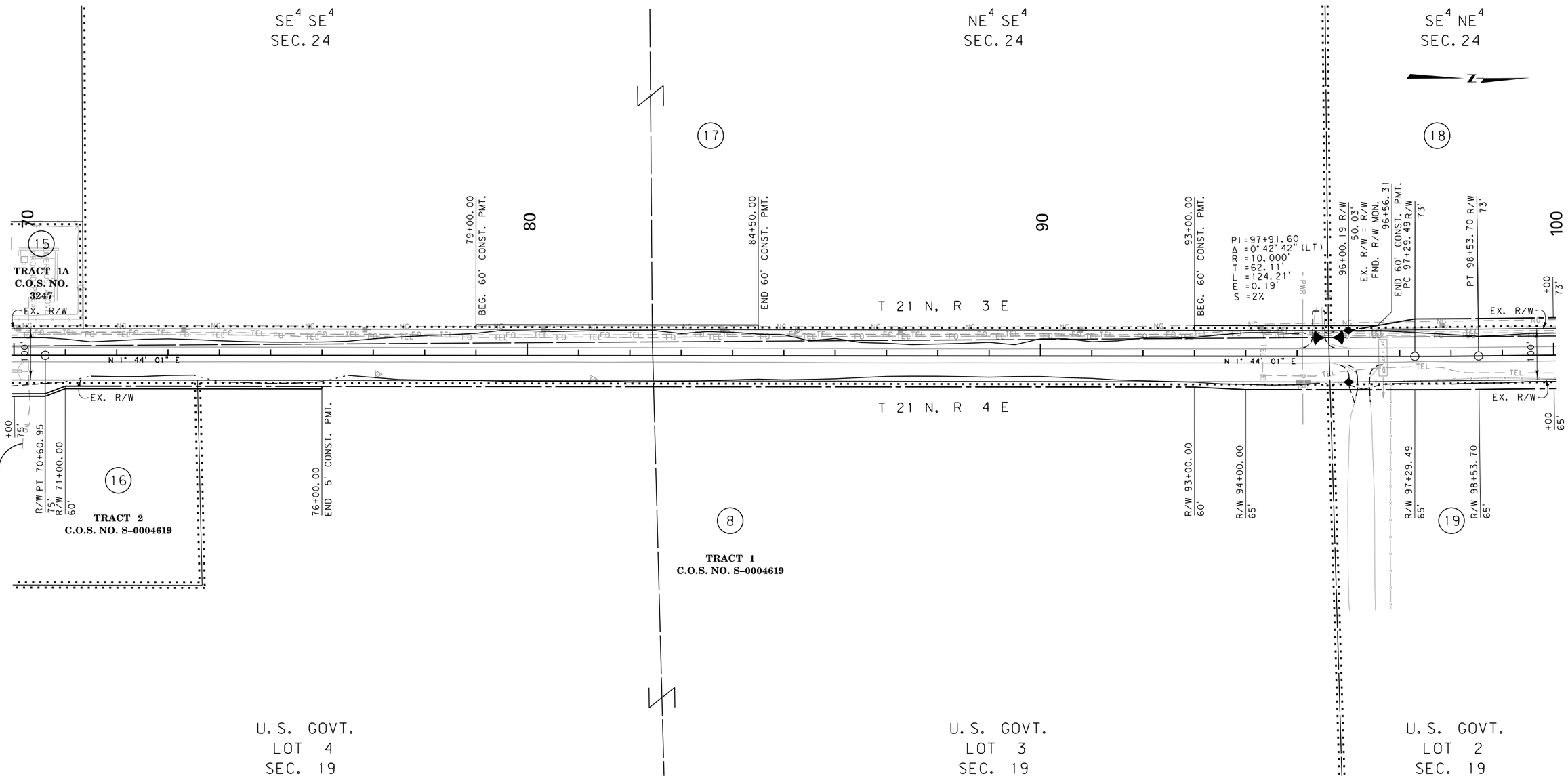

CONSTRUCTION LIMITS	MAP REVISED 10-18-13
CUT SECTION (TOP OF CUT)	
TRANSITION	
TOE OF FILL	
BACKSLOPE LIMITS INCLUDE ROUNDING	FHWA/MDT APPROVAL 12-28-12

3	MDT MONTANA DEPARTMENT OF TRANSPORTATION	c:\dgn\4826ropln001.dgn
2		1/29/2014
1		10:56:37 AM CPS-U1068

NOTES:
1. THE PROPOSED R/W LINE WHERE A SPIRAL CURVE TRANSITION IS USED IS A CHORD RATHER THAN A CONCENTRIC CURVE.
2. ALL STATIONS AND OFFSETS FOR R/W BREAKS ARE IN REFERENCE TO THE R/W BASELINE.

FOR EXISTING R/W RETRACEMENT, SEE
C.O.S. NO. S-0004867 & S-0004405

GRID STATE PLANE COORDINATES

THIS IS A STATE PLANE COORDINATE PROJECT. ALL DIMENSIONS, DISTANCES AND AREAS ON THIS PROJECT ARE GRID, EXCEPT FOR THE EXISTING R/W WIDTH DIMENSION, WHICH IS RECORD.
THE COMBINATION SCALE FACTOR IS 0.99928049

MONTANA DEPARTMENT OF TRANSPORTATION

RIGHT OF WAY PLAN

CASCADE COUNTY

SCALE 1" = 100'

0 50' 100' 200' 300'

STATE	RIGHT OF WAY	SHEET NO.	TOTAL SHEETS
MONTANA		7	24
R/W ID.	STPS-STPU 225-1(2)0		
PROJECT NO.	4826-002		

2 KM N OF GREAT FALLS - NORTH

SEE SHEET NO. 2 FOR OWNERSHIP NAMES, ADDRESSES, AREAS, ETC.

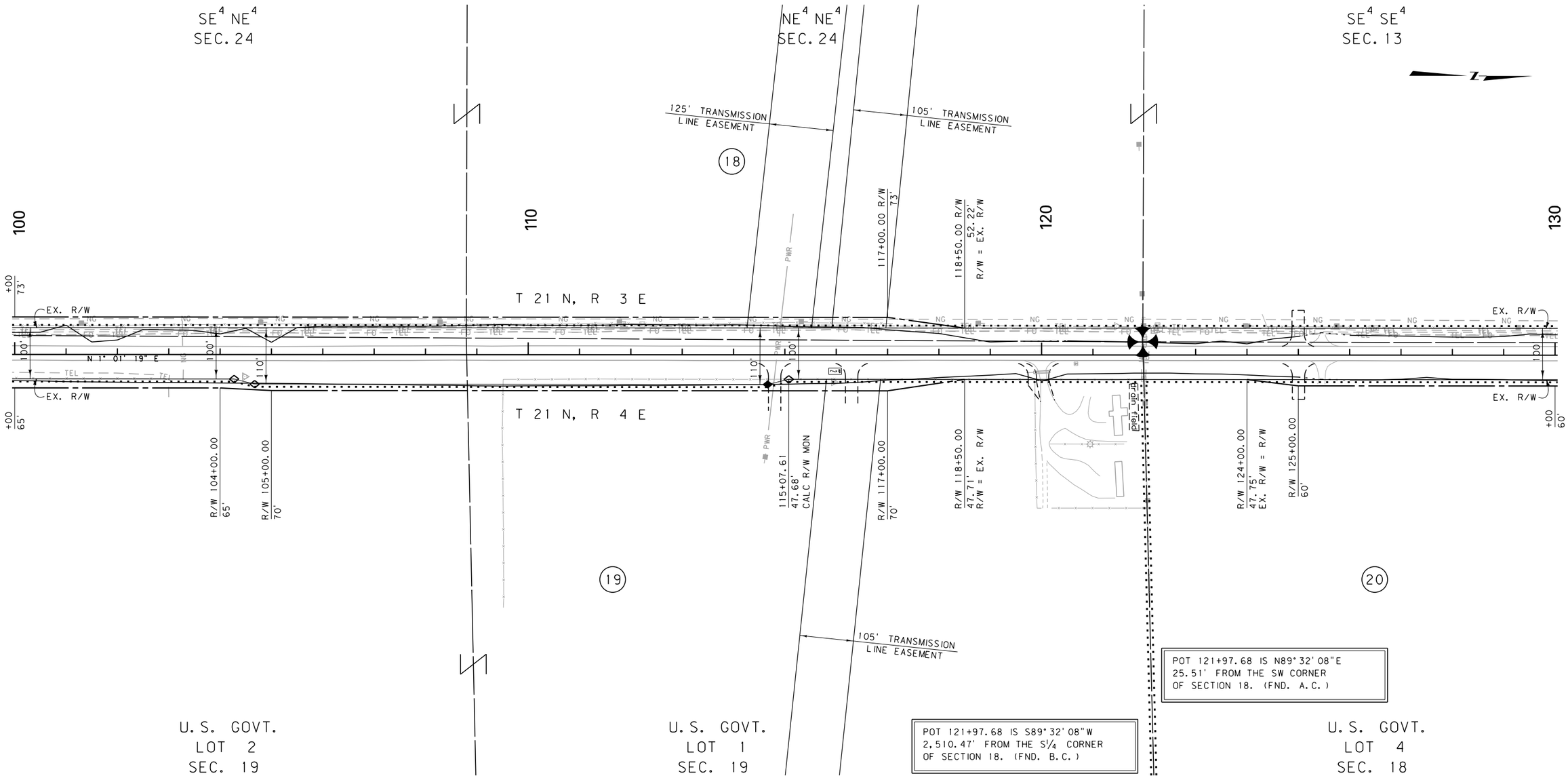

CONSTRUCTION LIMITS	MAP REVISED 7-23-13 10-18-13
CUT SECTION (TOP OF CUT)	
TRANSITION	
TOE OF FILL	
BACKSLOPE LIMITS INCLUDE ROUNDING	FHWA/MDT APPROVAL 12-28-12

3	MDT MONTANA DEPARTMENT OF TRANSPORTATION	c:\dgn\4826ropln002.dgn
2		1/29/2014
1		10:57:10 AM CPS - U1068

NOTES:
1. THE PROPOSED R/W LINE WHERE A SPIRAL CURVE TRANSITION IS USED IS A CHORD RATHER THAN A CONCENTRIC CURVE.
2. ALL STATIONS AND OFFSETS FOR R/W BREAKS ARE IN REFERENCE TO THE R/W BASELINE.

FOR EXISTING R/W RETRACEMENT, SEE C.O.S. NO. S-0004867 & S-0004405

GRID STATE PLANE COORDINATES

THIS IS A STATE PLANE COORDINATE PROJECT. ALL DIMENSIONS, DISTANCES AND AREAS ON THIS PROJECT ARE GRID, EXCEPT FOR THE EXISTING R/W WIDTH DIMENSION, WHICH IS RECORD.
THE COMBINATION SCALE FACTOR IS 0.99928049

MONTANA DEPARTMENT OF TRANSPORTATION

RIGHT OF WAY PLAN

CASCADE COUNTY

SCALE 1" = 100'

0 50' 100' 200' 300'

STATE	RIGHT OF WAY	SHEET NO.	TOTAL SHEETS
MONTANA		8	24
R/W ID.	STPS-STPU 225-1(2)0		
PROJECT NO.	4826-002		

2 KM N OF GREAT FALLS - NORTH

SEE SHEET NO. 2 FOR OWNERSHIP NAMES, ADDRESSES, AREAS, ETC.

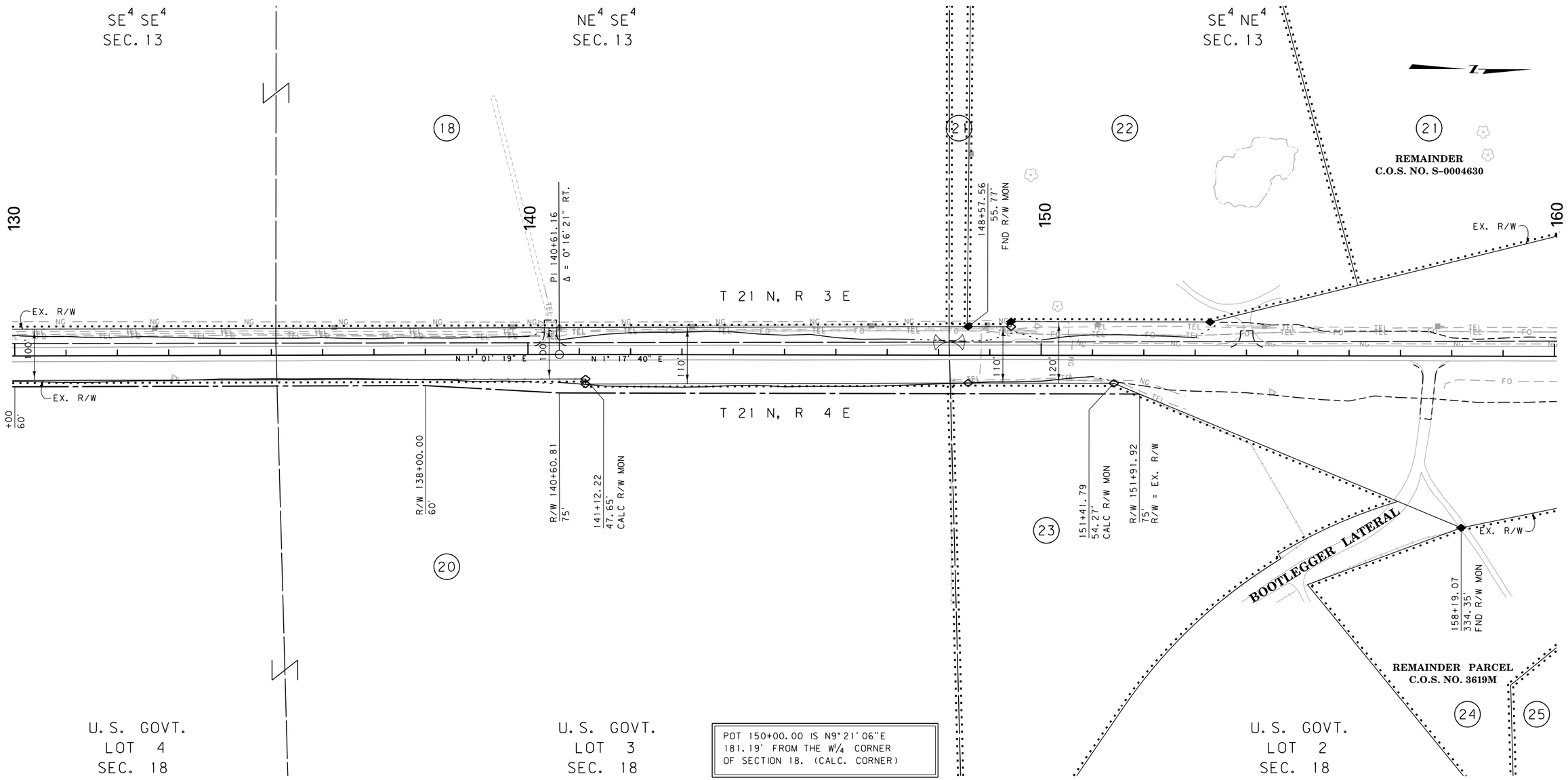

POT 150+00.00 IS N9°21'06"E 181.19' FROM THE W¼ CORNER OF SECTION 18. (CALC. CORNER)

CONSTRUCTION LIMITS	MAP REVISED 10-18-13
CUT SECTION (TOP OF CUT)	
TRANSITION	
TOE OF FILL	
BACKSLOPE LIMITS INCLUDE ROUNDING	FHWA/MDT APPROVAL 12-28-12

3	MDT MONTANA DEPARTMENT OF TRANSPORTATION	c:\dgn\4826ropln002.dgn	
2		1/29/2014	
1		10:57:16 AM	CPS - U1068

NOTES:
1. THE PROPOSED R/W LINE WHERE A SPIRAL CURVE TRANSITION IS USED IS A CHORD RATHER THAN A CONCENTRIC CURVE.
2. ALL STATIONS AND OFFSETS FOR R/W BREAKS ARE IN REFERENCE TO THE R/W BASELINE.

FOR EXISTING R/W RETRACEMENT, SEE C.O.S. NO. S-0004867 & S-0004405

GRID STATE PLANE COORDINATES

THIS IS A STATE PLANE COORDINATE PROJECT. ALL DIMENSIONS, DISTANCES AND AREAS ON THIS PROJECT ARE GRID, EXCEPT FOR THE EXISTING R/W WIDTH DIMENSION, WHICH IS RECORD.
THE COMBINATION SCALE FACTOR IS 0.99928049

MONTANA DEPARTMENT OF TRANSPORTATION

RIGHT OF WAY PLAN

CASCADE COUNTY

SCALE 1" = 100'

0 50' 100' 200' 300'

STATE	RIGHT OF WAY	SHEET NO.	TOTAL SHEETS
MONTANA		9	24
R/W ID.	STPS-STPU 225-1(210		
PROJECT NO.	4826-002		

2 KM N OF GREAT FALLS - NORTH

SEE SHEET NO. 2 FOR OWNERSHIP NAMES, ADDRESSES, AREAS, ETC.

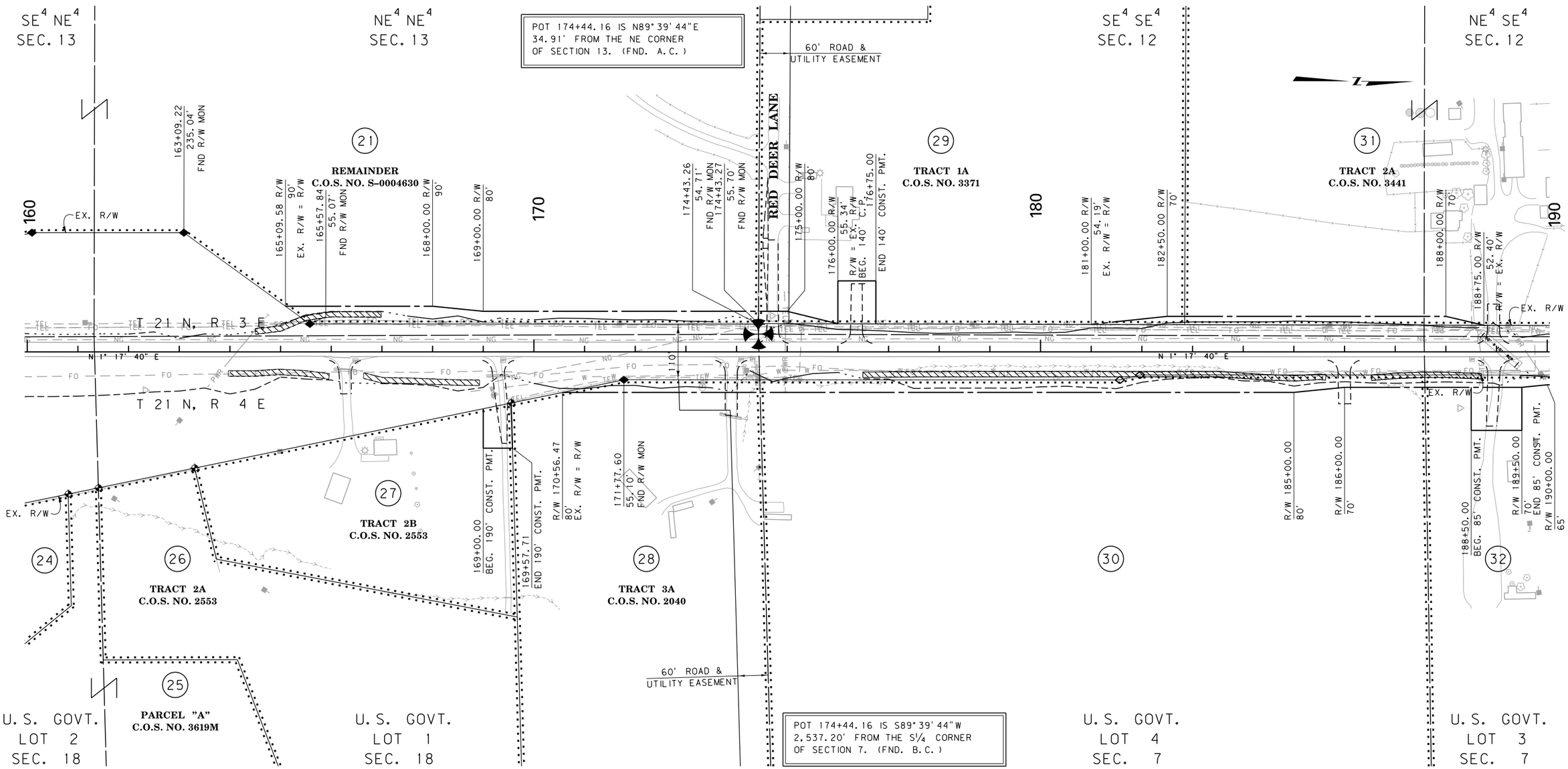

CONSTRUCTION LIMITS	MAP REVISED 7-23-13 10-18-13 11-18-13 11-25-13
CUT SECTION (TOP OF CUT)	
TRANSITION	
TOE OF FILL	
BACKSLOPE LIMITS INCLUDE ROUNDING	FHWA/MDT APPROVAL 12-28-12

3	MDT MONTANA DEPARTMENT OF TRANSPORTATION	c:\dgn\4826ropln002.dgn	
2		1/29/2014	
1		10:57:22 AM	CPS - U1068

NOTES:
1. THE PROPOSED R/W LINE WHERE A SPIRAL CURVE TRANSITION IS USED IS A CHORD RATHER THAN A CONCENTRIC CURVE.
2. ALL STATIONS AND OFFSETS FOR R/W BREAKS ARE IN REFERENCE TO THE R/W BASELINE.

FOR EXISTING R/W RETRACEMENT, SEE C.O.S. NO. S-0004867 & S-0004405

GRID STATE PLANE COORDINATES

THIS IS A STATE PLANE COORDINATE PROJECT. ALL DIMENSIONS, DISTANCES AND AREAS ON THIS PROJECT ARE GRID, EXCEPT FOR THE EXISTING R/W WIDTH DIMENSION, WHICH IS RECORD.
THE COMBINATION SCALE FACTOR IS 0.99928049

MONTANA DEPARTMENT OF TRANSPORTATION

RIGHT OF WAY PLAN

CASCADE COUNTY

SCALE 1" = 100'

0 50' 100' 200' 300'

STATE	RIGHT OF WAY	SHEET NO.	TOTAL SHEETS
MONTANA		10	24
R/W ID.	STPS-STPU 225-1(2)0		
PROJECT NO.	4826-002		

2 KM N OF GREAT FALLS - NORTH

SEE SHEET NO. 2 FOR OWNERSHIP NAMES, ADDRESSES, AREAS, ETC.

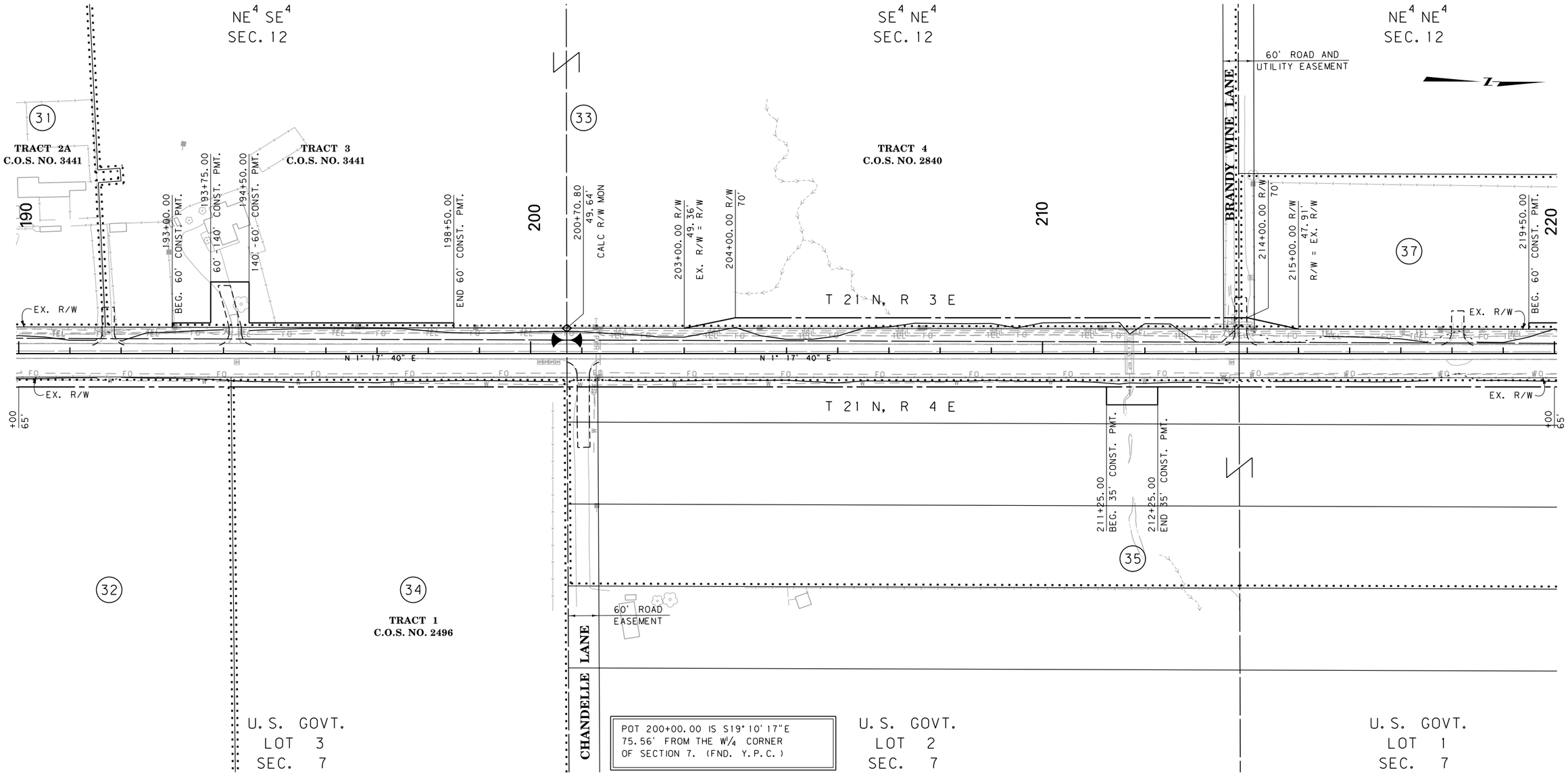

POT 200+00.00 IS S19°10'17"E 75.56' FROM THE W¼ CORNER OF SECTION 7. (FND. Y.P.C.)

FOR EXISTING R/W RETRACEMENT, SEE C.O.S. NO. S-0004867 & S-0004405

GRID STATE PLANE COORDINATES

THIS IS A STATE PLANE COORDINATE PROJECT. ALL DIMENSIONS, DISTANCES AND AREAS ON THIS PROJECT ARE GRID, EXCEPT FOR THE EXISTING R/W WIDTH DIMENSION, WHICH IS RECORD.
THE COMBINATION SCALE FACTOR IS 0.99928049

NOTES:
1. THE PROPOSED R/W LINE WHERE A SPIRAL CURVE TRANSITION IS USED IS A CHORD RATHER THAN A CONCENTRIC CURVE.
2. ALL STATIONS AND OFFSETS FOR R/W BREAKS ARE IN REFERENCE TO THE R/W BASELINE.

CONSTRUCTION LIMITS
CUT SECTION (TOP OF CUT)
TRANSITION
TOE OF FILL
BACKSLOPE LIMITS INCLUDE ROUNDING

MAP REVISED 7-23-13 10-18-13

FHWA/MDT APPROVAL 12-28-12

3
2
1

MDT MONTANA DEPARTMENT OF TRANSPORTATION

c:\dgn\4826ropln003.dgn
1/29/2014
10:57:49 AM CPS-U1068

MONTANA DEPARTMENT OF TRANSPORTATION
RIGHT OF WAY PLAN
CASCADE COUNTY
SCALE 1" = 100'
0 50' 100' 200' 300'

STATE	RIGHT OF WAY	SHEET NO.	TOTAL SHEETS
MONTANA		11	24
R/W ID.	STPS-STPU 225-1(2)0		
PROJECT NO.	4826-002		

2 KM N OF GREAT FALLS - NORTH

SEE SHEET NO. 2-3 FOR OWNERSHIP NAMES, ADDRESSES, AREAS, ETC.

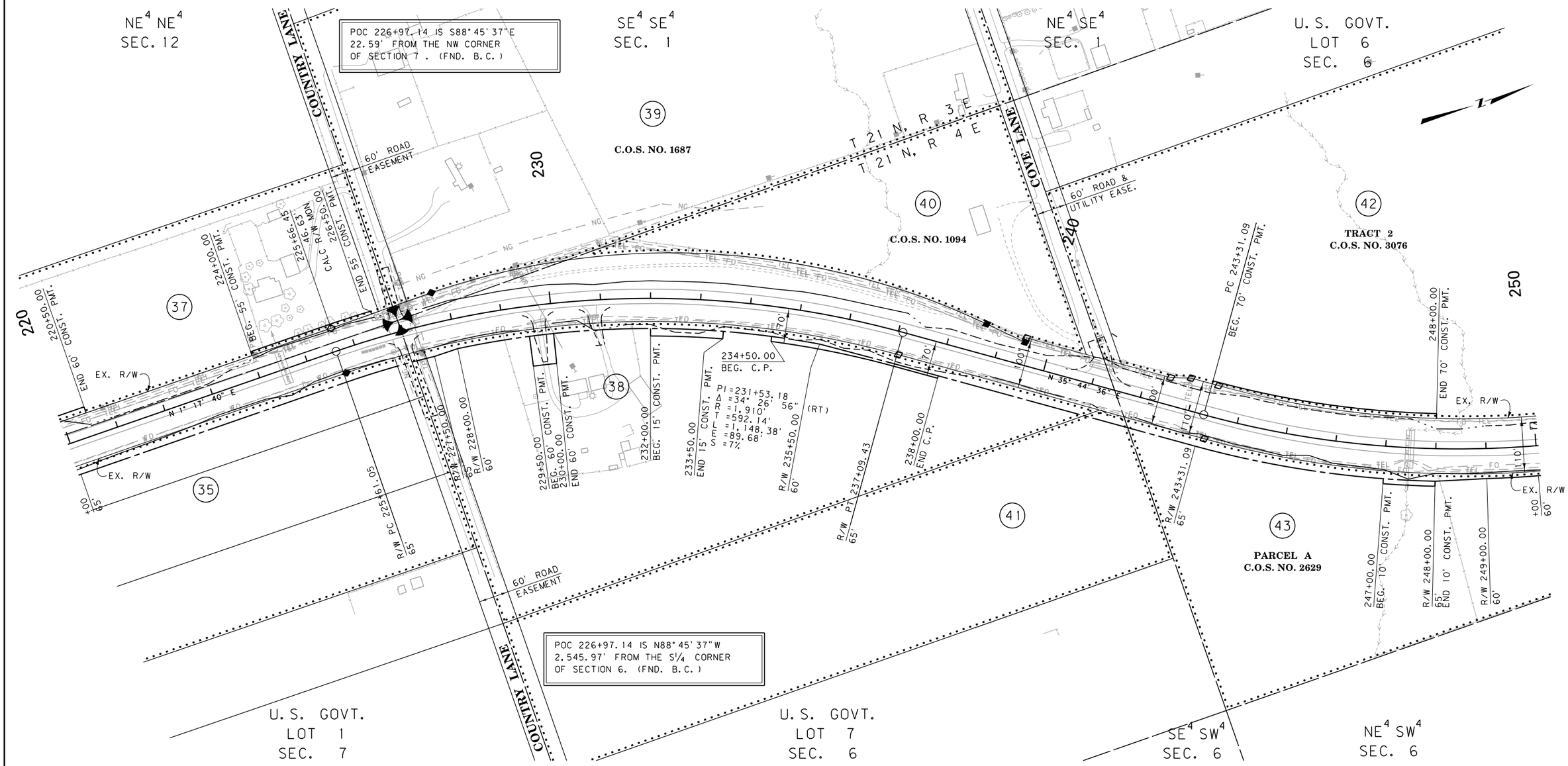

CONSTRUCTION LIMITS	MAP REVISED 10-18-13 11-18-13
CUT SECTION (TOP OF CUT)	
TRANSITION	
TOE OF FILL	
BACKSLOPE LIMITS INCLUDE ROUNDING	FHWA/MDT APPROVAL 12-28-12

3	MDT MONTANA DEPARTMENT OF TRANSPORTATION	c:\dgn\4826ropln003.dgn
2		1/29/2014
1		10:57:55 AM CPS - U1068

FOR EXISTING R/W RETRACEMENT, SEE
C.O.S. NO. S-0004867 & S-0004405

GRID STATE PLANE COORDINATES

THIS IS A STATE PLANE COORDINATE PROJECT. ALL DIMENSIONS, DISTANCES AND AREAS ON THIS PROJECT ARE GRID, EXCEPT FOR THE EXISTING R/W WIDTH DIMENSION, WHICH IS RECORD.
THE COMBINATION SCALE FACTOR IS 0.99928049

NOTES:
1. THE PROPOSED R/W LINE WHERE A SPIRAL CURVE TRANSITION IS USED IS A CHORD RATHER THAN A CONCENTRIC CURVE.
2. ALL STATIONS AND OFFSETS FOR R/W BREAKS ARE IN REFERENCE TO THE R/W BASELINE.

MONTANA DEPARTMENT OF TRANSPORTATION

RIGHT OF WAY PLAN

CASCADE COUNTY

SCALE 1"=100'

0 50' 100' 200' 300'

STATE	RIGHT OF WAY	SHEET NO.	TOTAL SHEETS
MONTANA		12	24
R/W ID.	STPS-STPU 225-1(2)0		
PROJECT NO.	4826-002		

2 KM N OF GREAT FALLS - NORTH

SEE SHEET NO. 2-3 FOR OWNERSHIP NAMES, ADDRESSES, AREAS, ETC.

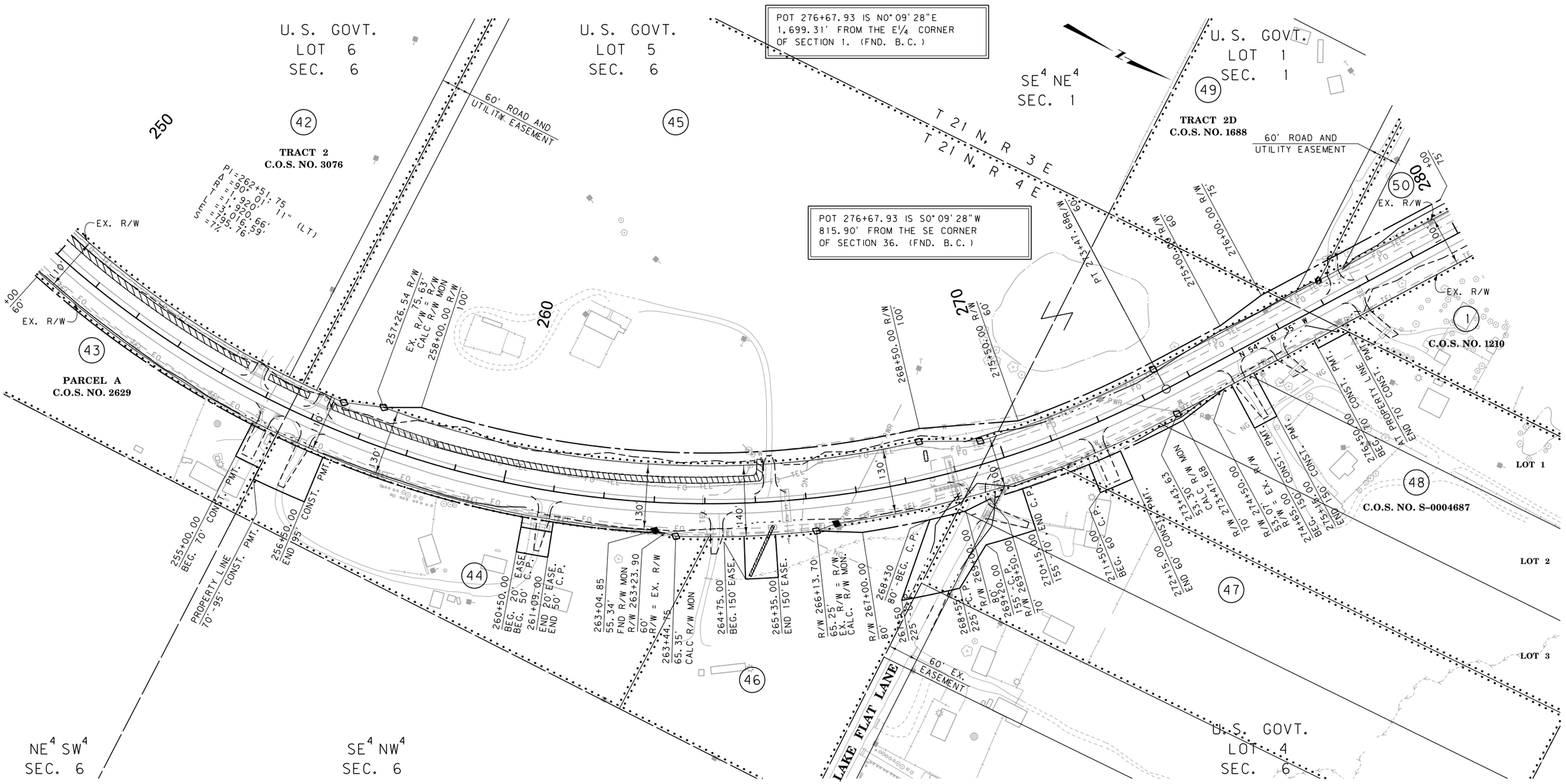

CONSTRUCTION LIMITS	MAP REVISED 7-23-13 9-25-13 10-18-13 11-18-13 1-14-14
CUT SECTION (TOP OF CUT)	
TRANSITION	
TOE OF FILL	
BACKSLOPE LIMITS INCLUDE ROUNDING	FHWA/MDT APPROVAL 12-28-12

3	MDT MONTANA DEPARTMENT OF TRANSPORTATION	c:\dgn\4826ropln003.dgn	
2		1/29/2014	
1		10:58:00 AM	CPS - U1068

NOTES:
1. THE PROPOSED R/W LINE WHERE A SPIRAL CURVE TRANSITION IS USED IS A CHORD RATHER THAN A CONCENTRIC CURVE.
2. ALL STATIONS AND OFFSETS FOR R/W BREAKS ARE IN REFERENCE TO THE R/W BASELINE.

FOR EXISTING R/W RETRACEMENT, SEE C.O.S. NO. S-0004867 & S-0004405

GRID STATE PLANE COORDINATES

THIS IS A STATE PLANE COORDINATE PROJECT. ALL DIMENSIONS, DISTANCES AND AREAS ON THIS PROJECT ARE GRID, EXCEPT FOR THE EXISTING R/W WIDTH DIMENSION, WHICH IS RECORD.
THE COMBINATION SCALE FACTOR IS 0.99928049

MONTANA DEPARTMENT OF TRANSPORTATION

RIGHT OF WAY PLAN

CASCADE COUNTY

SCALE 1" = 100'

0 50' 100' 200' 300'

STATE	RIGHT OF WAY	SHEET NO.	TOTAL SHEETS
MONTANA		13	24
R/W ID.	STPS-STPU 225-1(2)0		
PROJECT NO.	4826-002		

2 KM N OF GREAT FALLS - NORTH

SEE SHEET NO. 2-3 FOR OWNERSHIP NAMES, ADDRESSES, AREAS, ETC.

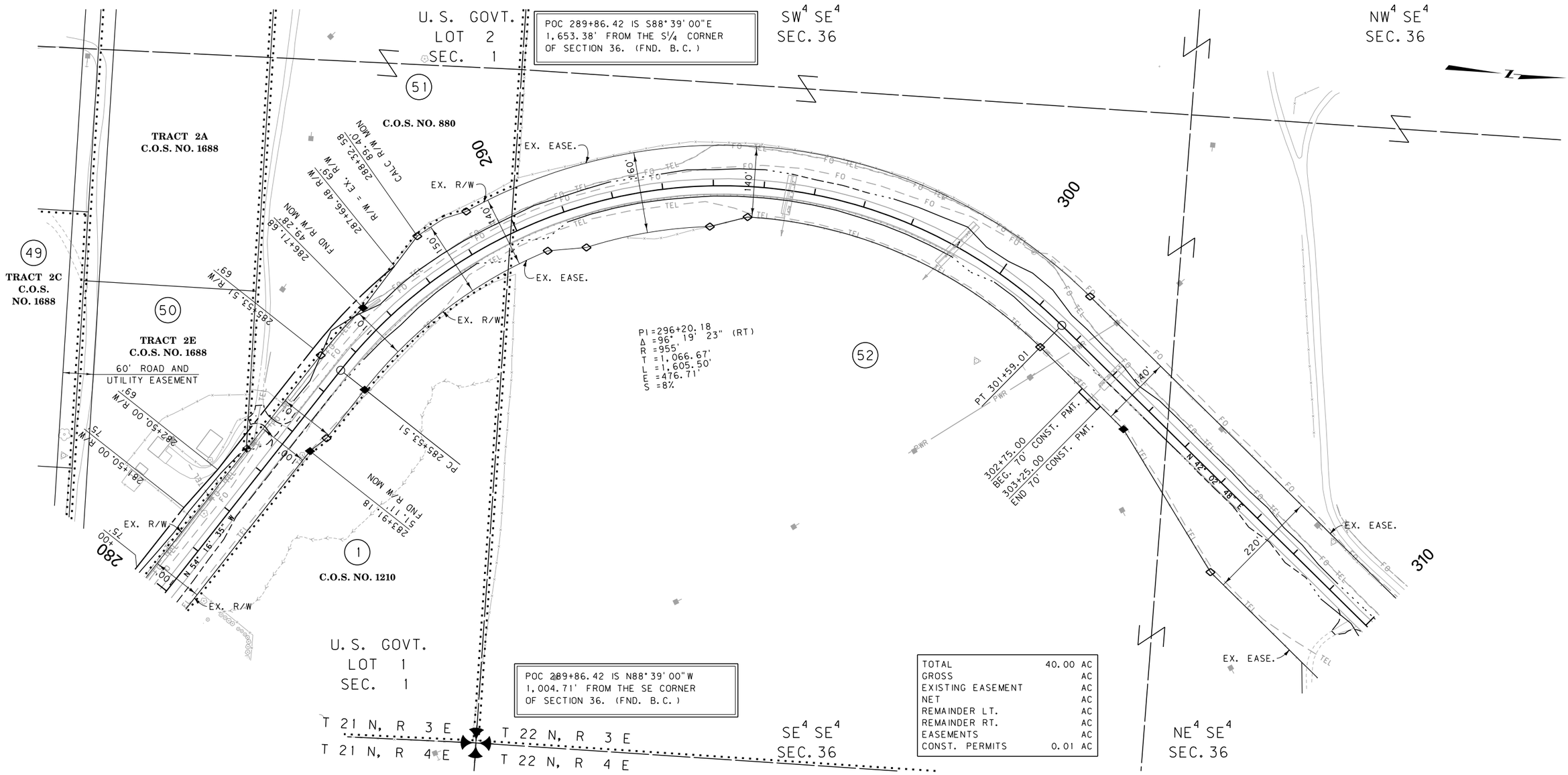

TOTAL	40.00	AC
GROSS		AC
EXISTING EASEMENT		AC
NET		AC
REMAINDER LT.		AC
REMAINDER RT.		AC
EASEMENTS		AC
CONST. PERMITS	0.01	AC

FOR EXISTING R/W RETRACEMENT, SEE
C.O.S. NO. S-0004867 & S-0004405

GRID STATE PLANE COORDINATES

THIS IS A STATE PLANE COORDINATE PROJECT. ALL DIMENSIONS, DISTANCES AND AREAS ON THIS PROJECT ARE GRID, EXCEPT FOR THE EXISTING R/W WIDTH DIMENSION, WHICH IS RECORD.
THE COMBINATION SCALE FACTOR IS 0.99928049

NOTES:
1. THE PROPOSED R/W LINE WHERE A SPIRAL CURVE TRANSITION IS USED IS A CHORD RATHER THAN A CONCENTRIC CURVE.
2. ALL STATIONS AND OFFSETS FOR R/W BREAKS ARE IN REFERENCE TO THE R/W BASELINE.

CONSTRUCTION LIMITS
CUT SECTION (TOP OF CUT)
TRANSITION
TOE OF FILL
BACKSLOPE LIMITS INCLUDE ROUNDING

MAP REVISED 8-30-13 10-18-13

FHWA/MDT APPROVAL
12-28-12

3	MDT MONTANA DEPARTMENT OF TRANSPORTATION	c:\dgn\4826ropln004.dgn
2		1/29/2014
1		10:58:29 AM CPS-U1068

MONTANA DEPARTMENT OF TRANSPORTATION

RIGHT OF WAY PLAN

CASCADE COUNTY

SCALE 1"=100'

0 50' 100' 200' 300'

STATE	RIGHT OF WAY	SHEET NO.	TOTAL SHEETS
MONTANA		14	24
R/W ID.	STPS-STPU 225-1(2)0		
PROJECT NO.	4826-002		

2 KM N OF GREAT FALLS - NORTH

SEE SHEET NO. 3 FOR OWNERSHIP NAMES, ADDRESSES, AREAS, ETC.

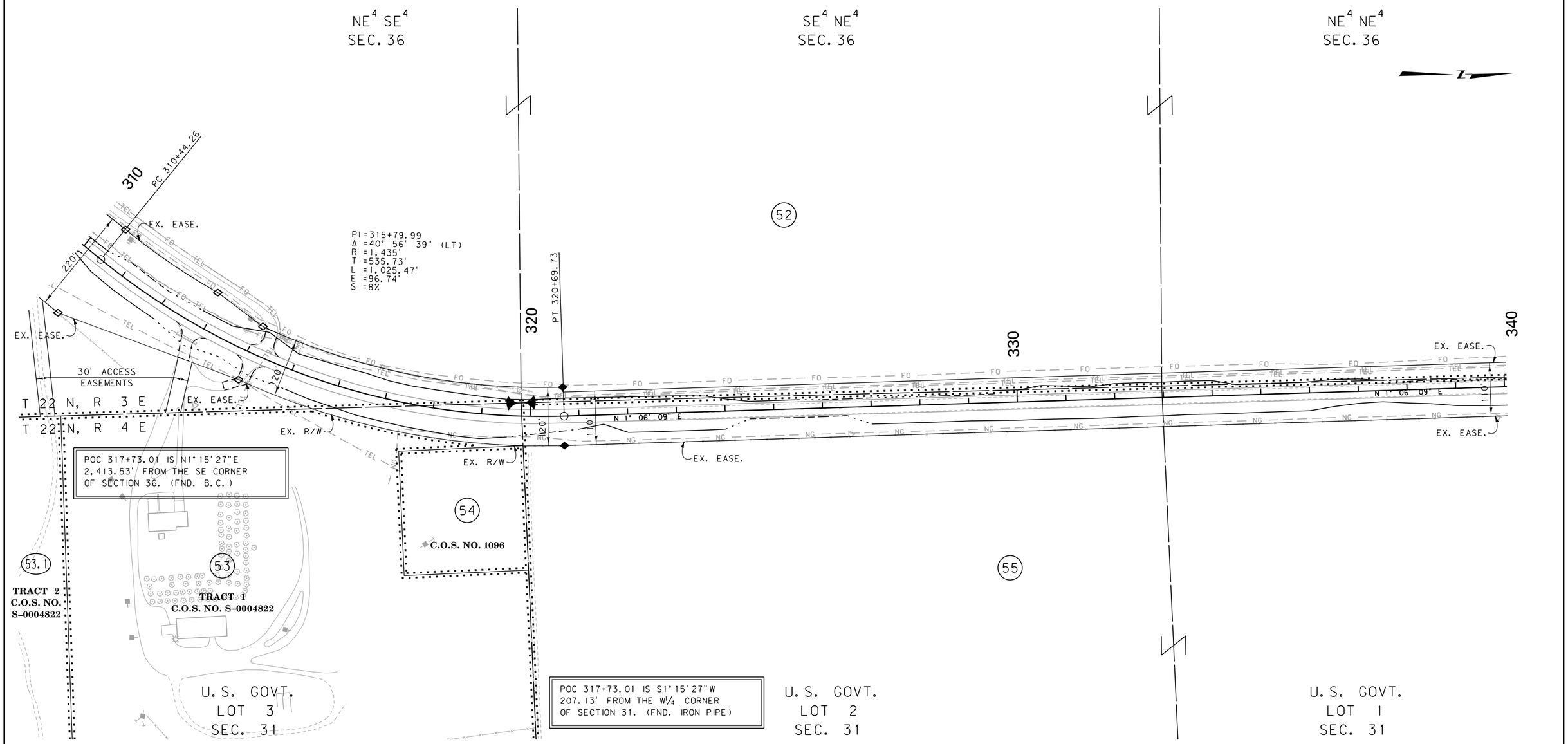

CONSTRUCTION LIMITS	MAP REVISED 9-25-13 10-18-13
CUT SECTION (TOP OF CUT)	
TRANSITION	
TOE OF FILL	
BACKSLOPE LIMITS INCLUDE ROUNDING	FHWA/MDT APPROVAL 12-28-12

3
2
1

MDT MONTANA DEPARTMENT OF TRANSPORTATION

c:\dgn\4826ropln004.dgn
1/29/2014
10:58:35 AM CPS - U1068

NOTES:
1. THE PROPOSED R/W LINE WHERE A SPIRAL CURVE TRANSITION IS USED IS A CHORD RATHER THAN A CONCENTRIC CURVE.
2. ALL STATIONS AND OFFSETS FOR R/W BREAKS ARE IN REFERENCE TO THE R/W BASELINE.

FOR EXISTING R/W RETRACEMENT, SEE
C.O.S. NO. S-0004867 & S-0004405

GRID STATE PLANE COORDINATES

THIS IS A STATE PLANE COORDINATE PROJECT. ALL DIMENSIONS, DISTANCES AND AREAS ON THIS PROJECT ARE GRID, EXCEPT FOR THE EXISTING R/W WIDTH DIMENSION, WHICH IS RECORD.
THE COMBINATION SCALE FACTOR IS 0.99928049

MONTANA DEPARTMENT OF TRANSPORTATION

RIGHT OF WAY PLAN

CASCADE COUNTY

SCALE 1" = 100'

0 50' 100' 200' 300'

STATE	RIGHT OF WAY	SHEET NO.	TOTAL SHEETS
MONTANA		15	24
R/W ID.	STPS-STPU 225-1(2)0		
PROJECT NO.	4826-002		

2 KM N OF GREAT FALLS - NORTH

SEE SHEET NO. 3 FOR OWNERSHIP NAMES, ADDRESSES, AREAS, ETC.

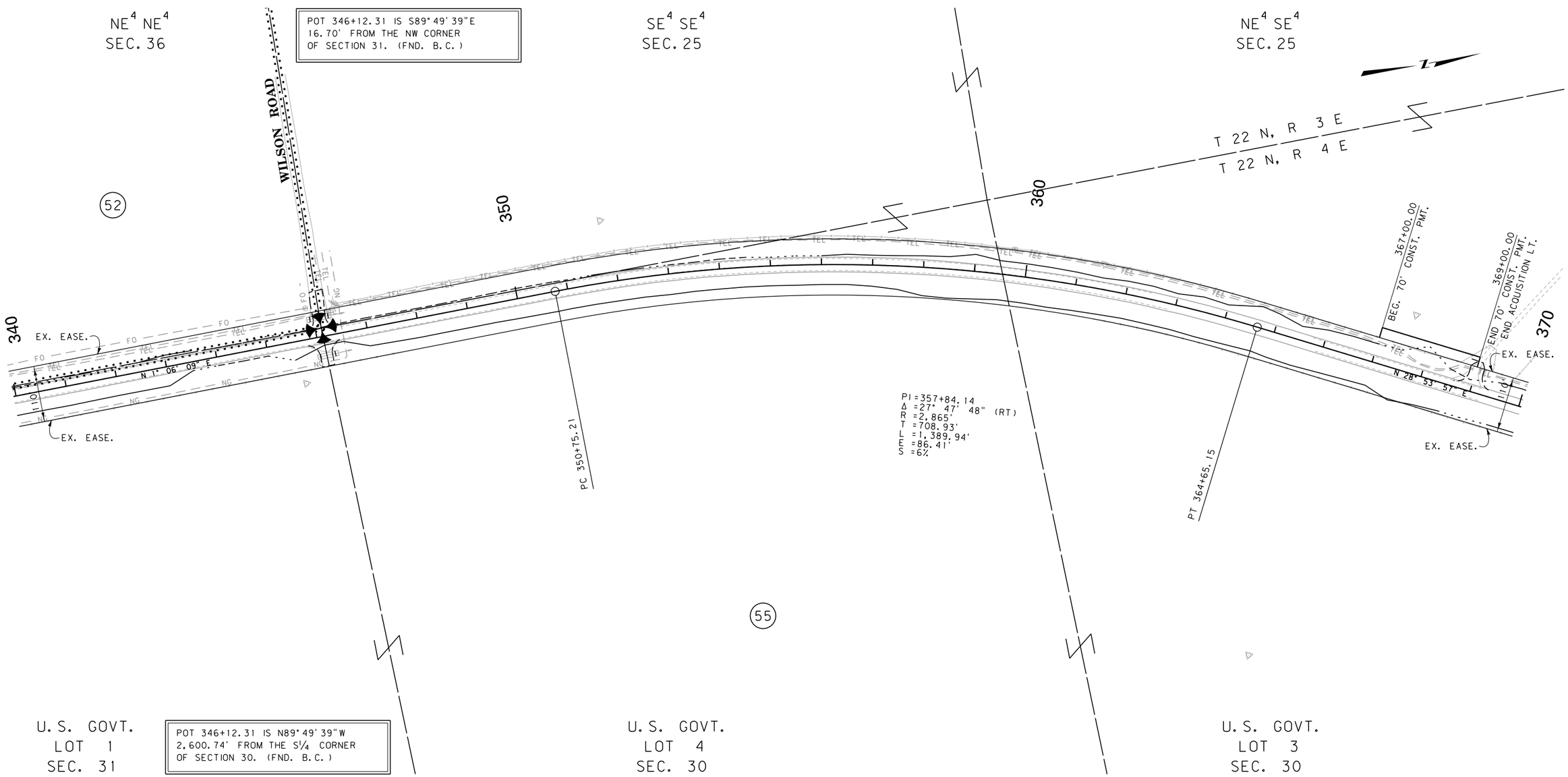

CONSTRUCTION LIMITS	MAP REVISED 10-18-13
CUT SECTION (TOP OF CUT)	
TRANSITION	
TOE OF FILL	
BACKSLOPE LIMITS INCLUDE ROUNDING	FHWA/MDT APPROVAL 12-28-12

3	MDT MONTANA DEPARTMENT OF TRANSPORTATION	c:\dgn\4826ropln004.dgn
2		1/29/2014
1		10:58:40 AM CPS-U1068

NOTES:
1. THE PROPOSED R/W LINE WHERE A SPIRAL CURVE TRANSITION IS USED IS A CHORD RATHER THAN A CONCENTRIC CURVE.
2. ALL STATIONS AND OFFSETS FOR R/W BREAKS ARE IN REFERENCE TO THE R/W BASELINE.

FOR EXISTING R/W RETRACEMENT, SEE
C.O.S. NO. S-0004867 & S-0004405

GRID STATE PLANE COORDINATES

THIS IS A STATE PLANE COORDINATE PROJECT. ALL DIMENSIONS, DISTANCES AND AREAS ON THIS PROJECT ARE GRID, EXCEPT FOR THE EXISTING R/W WIDTH DIMENSION, WHICH IS RECORD.
THE COMBINATION SCALE FACTOR IS 0.99928049

MONTANA DEPARTMENT OF TRANSPORTATION

RIGHT OF WAY PLAN

CASCADE COUNTY

SCALE 1" = 100'

0 50' 100' 200' 300'

STATE	RIGHT OF WAY	SHEET NO.	TOTAL SHEETS
MONTANA		16	24
R/W ID.	STPS-STPU 225-1(2)0		
PROJECT NO.	4826-002		

2 KM N OF GREAT FALLS - NORTH

SEE SHEET NO. 3 FOR OWNERSHIP NAMES, ADDRESSES, AREAS, ETC.

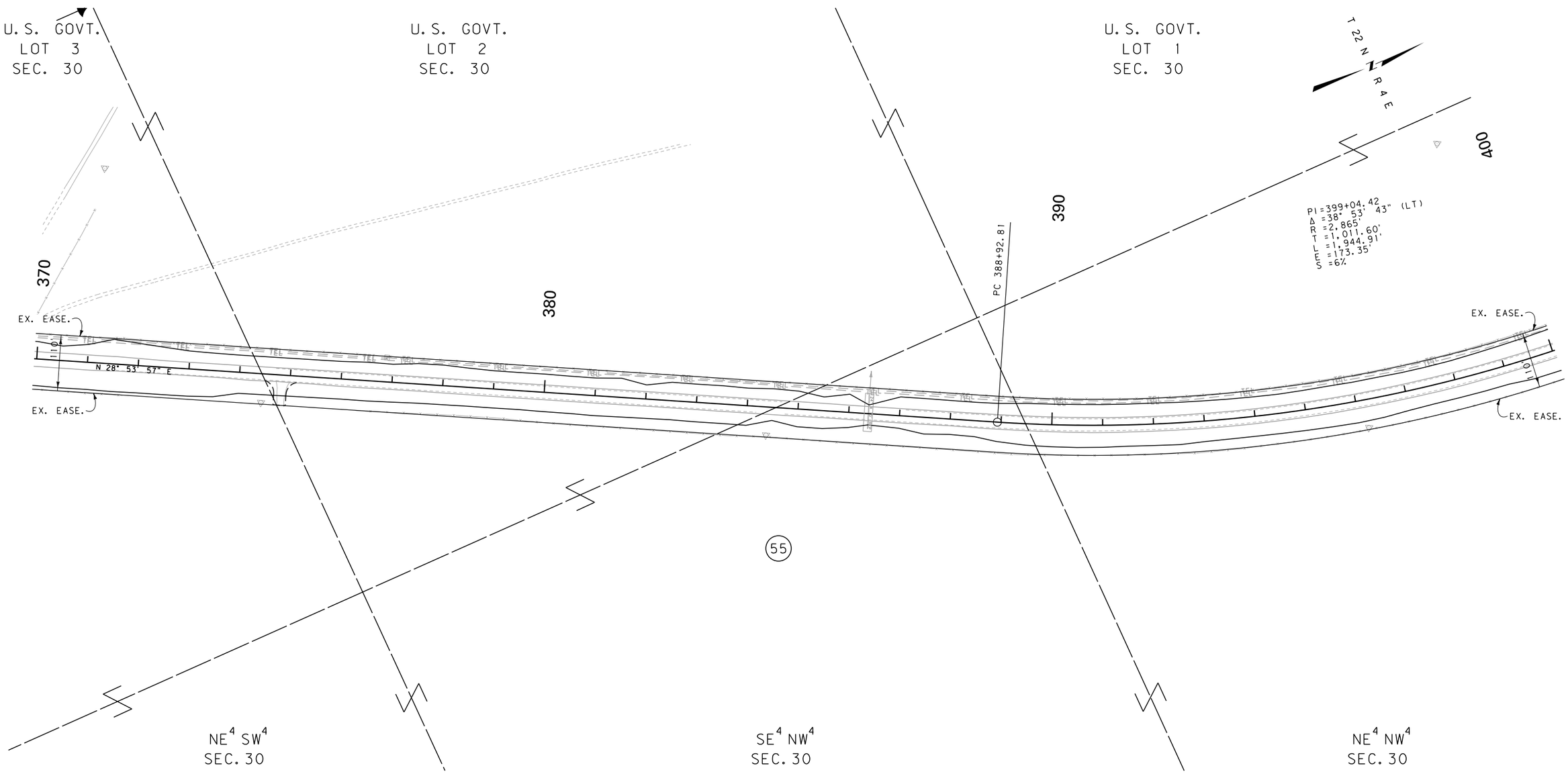

CONSTRUCTION LIMITS	MAP REVISED 10-18-13
CUT SECTION (TOP OF CUT)	
TRANSITION	
TOE OF FILL	
BACKSLOPE LIMITS INCLUDE ROUNDING	FHWA/MDT APPROVAL 12-28-12

3	MDT MONTANA DEPARTMENT OF TRANSPORTATION	c:\dgn\4826ropln005.dgn	
2		1/29/2014	
1		10:59:01 AM	CPS - U1068

NOTES:
1. THE PROPOSED R/W LINE WHERE A SPIRAL CURVE TRANSITION IS USED IS A CHORD RATHER THAN A CONCENTRIC CURVE.
2. ALL STATIONS AND OFFSETS FOR R/W BREAKS ARE IN REFERENCE TO THE R/W BASELINE.

FOR EXISTING R/W RETRACEMENT, SEE C.O.S. NO. S-0004867 & S-0004405

GRID STATE PLANE COORDINATES

THIS IS A STATE PLANE COORDINATE PROJECT. ALL DIMENSIONS, DISTANCES AND AREAS ON THIS PROJECT ARE GRID, EXCEPT FOR THE EXISTING R/W WIDTH DIMENSION, WHICH IS RECORD.
THE COMBINATION SCALE FACTOR IS 0.99928049

MONTANA DEPARTMENT OF TRANSPORTATION

RIGHT OF WAY PLAN

CASCADE COUNTY

SCALE 1" = 100'

0 50' 100' 200' 300'

STATE	RIGHT OF WAY	SHEET NO.	TOTAL SHEETS
MONTANA		17	24
R/W ID.	STPS-STPU 225-1(2)0		
PROJECT NO.	4826-002		

2 KM N OF GREAT FALLS - NORTH

SEE SHEET NO. 3 FOR OWNERSHIP NAMES, ADDRESSES, AREAS, ETC.

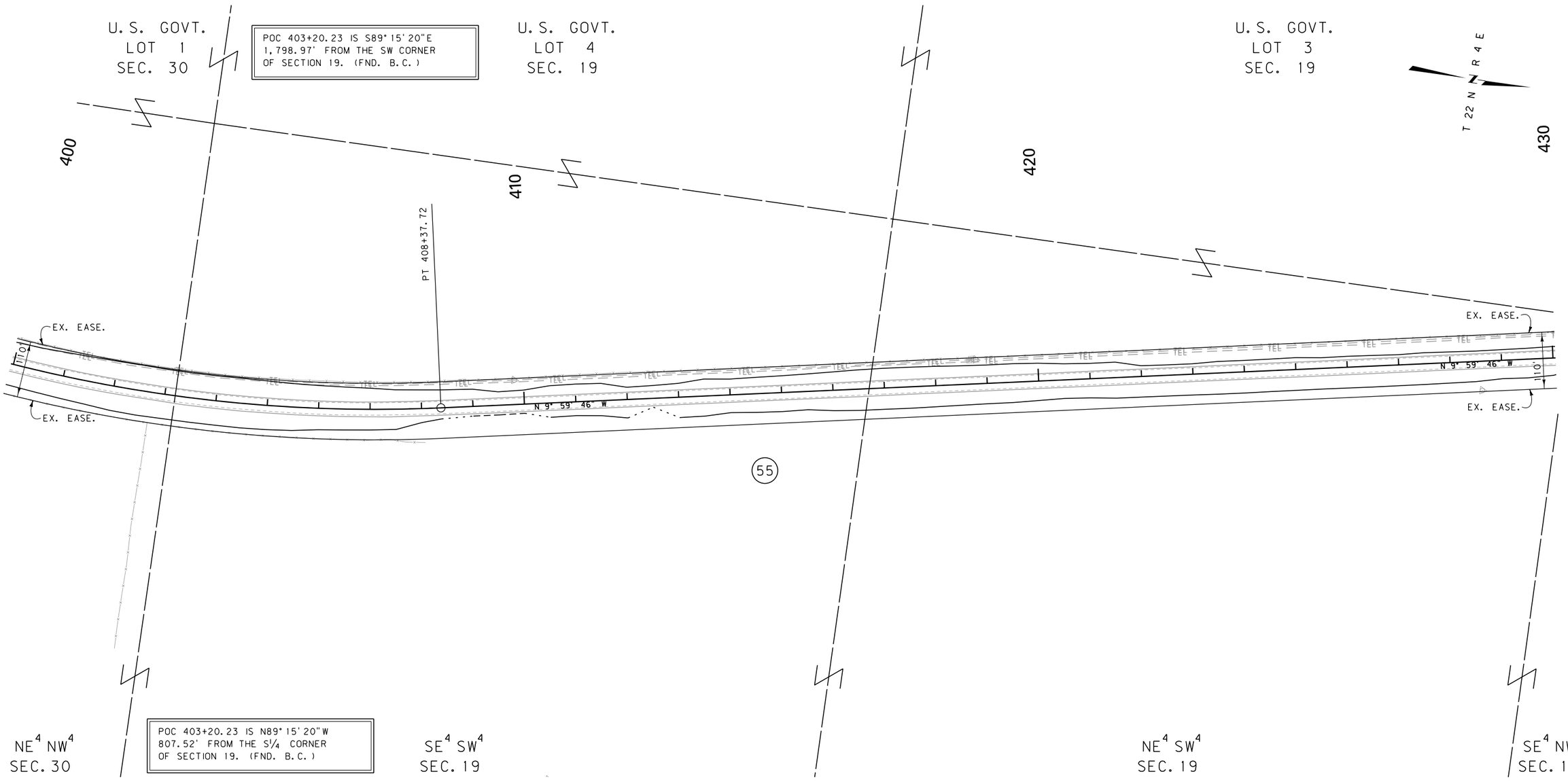

CONSTRUCTION LIMITS	MAP REVISED 10-18-13
CUT SECTION (TOP OF CUT)	
TRANSITION	
TOE OF FILL	
BACKSLOPE LIMITS INCLUDE ROUNDING	FHWA/MDT APPROVAL 12-28-12

3	MDT MONTANA DEPARTMENT OF TRANSPORTATION	c:\dgn\4826ropln005.dgn
2		1/29/2014
1		10:59:07 AM CPS-U1068

NOTES:
1. THE PROPOSED R/W LINE WHERE A SPIRAL CURVE TRANSITION IS USED IS A CHORD RATHER THAN A CONCENTRIC CURVE.
2. ALL STATIONS AND OFFSETS FOR R/W BREAKS ARE IN REFERENCE TO THE R/W BASELINE.

FOR EXISTING R/W RETRACEMENT, SEE
C.O.S. NO. S-0004867 & S-0004405

GRID STATE PLANE COORDINATES

THIS IS A STATE PLANE COORDINATE PROJECT. ALL DIMENSIONS, DISTANCES AND AREAS ON THIS PROJECT ARE GRID, EXCEPT FOR THE EXISTING R/W WIDTH DIMENSION, WHICH IS RECORD.
THE COMBINATION SCALE FACTOR IS 0.99928049

MONTANA DEPARTMENT OF TRANSPORTATION

RIGHT OF WAY PLAN

CASCADE COUNTY

SCALE 1" = 100'

0 50' 100' 200' 300'

STATE	RIGHT OF WAY	SHEET NO.	TOTAL SHEETS
MONTANA		18	24
R/W ID.	STPS-STPU 225-1(2)0		
PROJECT NO.	4826-002		

2 KM N OF GREAT FALLS - NORTH

SEE SHEET NO. 3 FOR OWNERSHIP NAMES, ADDRESSES, AREAS, ETC.

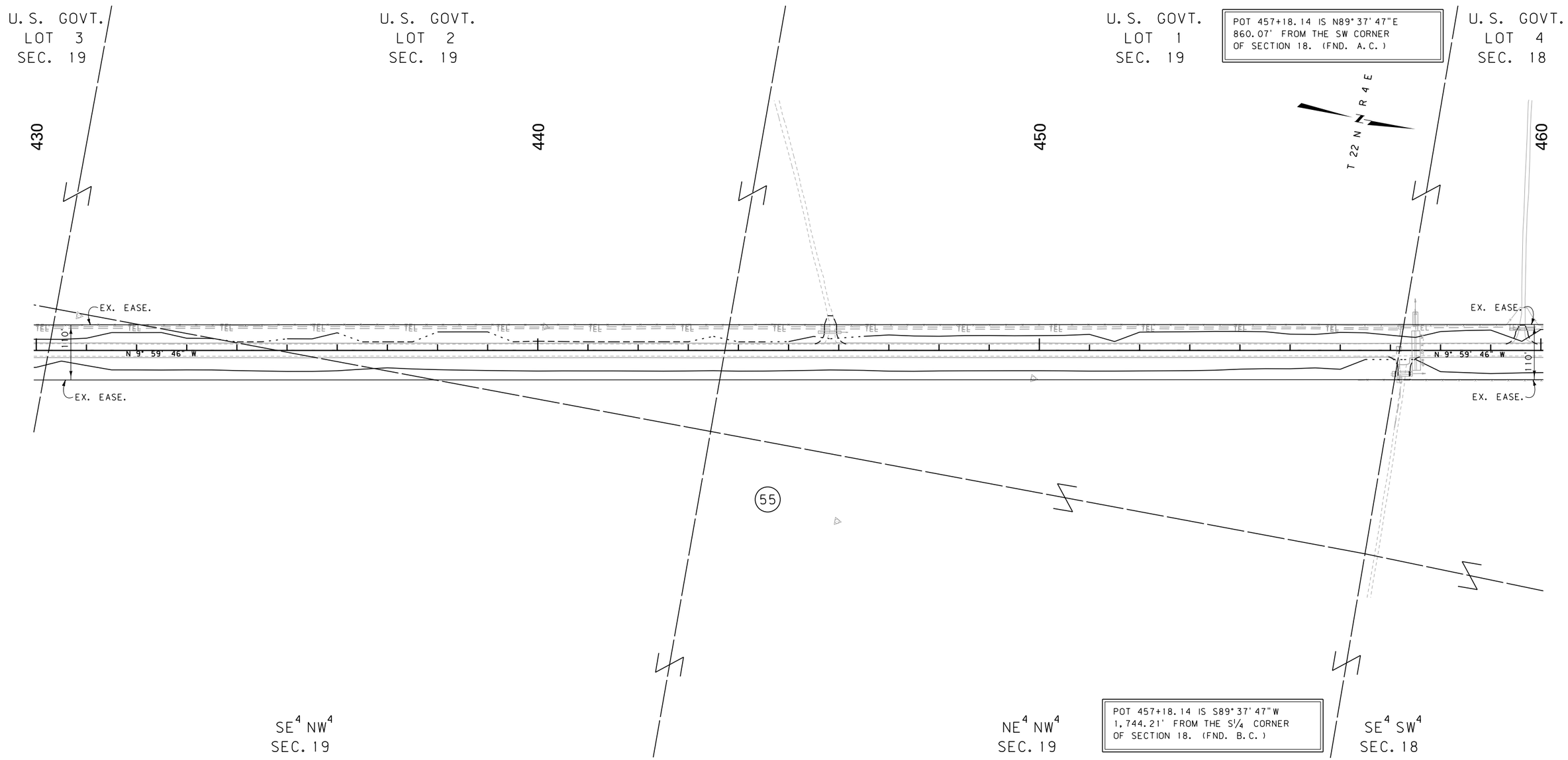

CONSTRUCTION LIMITS	MAP REVISED 10-18-13
CUT SECTION (TOP OF CUT)	
TRANSITION	
TOE OF FILL	
BACKSLOPE LIMITS INCLUDE ROUNDING	FHWA/MDT APPROVAL 12-28-12

3	MDT MONTANA DEPARTMENT OF TRANSPORTATION	c:\dgn\4826ropln005.dgn	
2		1/29/2014	
1		10:59:12 AM	CPS - U1068

NOTES:
1. THE PROPOSED R/W LINE WHERE A SPIRAL CURVE TRANSITION IS USED IS A CHORD RATHER THAN A CONCENTRIC CURVE.
2. ALL STATIONS AND OFFSETS FOR R/W BREAKS ARE IN REFERENCE TO THE R/W BASELINE.

FOR EXISTING R/W RETRACEMENT, SEE
C.O.S. NO. S-0004867 & S-0004405

GRID STATE PLANE COORDINATES

THIS IS A STATE PLANE COORDINATE PROJECT. ALL DIMENSIONS, DISTANCES AND AREAS ON THIS PROJECT ARE GRID, EXCEPT FOR THE EXISTING R/W WIDTH DIMENSION, WHICH IS RECORD.
THE COMBINATION SCALE FACTOR IS 0.99928049

MONTANA DEPARTMENT OF TRANSPORTATION

RIGHT OF WAY PLAN

CASCADE COUNTY

SCALE 1" = 100'

0 50' 100' 200' 300'

STATE	RIGHT OF WAY	SHEET NO.	TOTAL SHEETS
MONTANA		19	24
R/W ID.	STPS-STPU 225-1(2)0		
PROJECT NO.	4826-002		

2 KM N OF GREAT FALLS - NORTH

SEE SHEET NO. 3 FOR OWNERSHIP NAMES, ADDRESSES, AREAS, ETC.

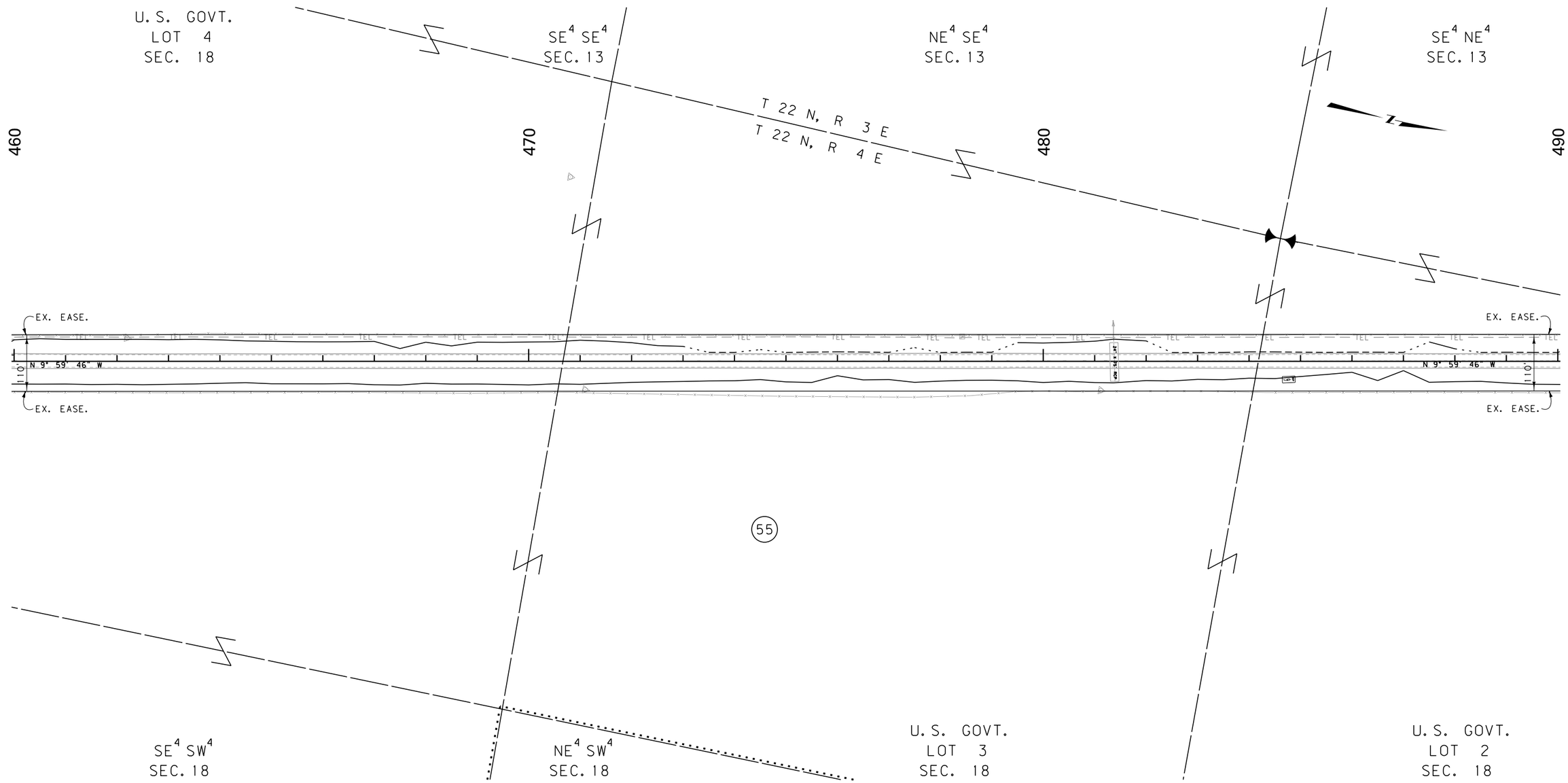

CONSTRUCTION LIMITS	MAP REVISED 10-18-13
CUT SECTION (TOP OF CUT)	
TRANSITION	
TOE OF FILL	
BACKSLOPE LIMITS INCLUDE ROUNDING	FHWA/MDT APPROVAL 12-28-12

3
2
1

MDT MONTANA DEPARTMENT OF TRANSPORTATION

c:\dgn\4826ropln006.dgn
1/29/2014
10:59:45 AM CPS - U1068

NOTES:
1. THE PROPOSED R/W LINE WHERE A SPIRAL CURVE TRANSITION IS USED IS A CHORD RATHER THAN A CONCENTRIC CURVE.
2. ALL STATIONS AND OFFSETS FOR R/W BREAKS ARE IN REFERENCE TO THE R/W BASELINE.

FOR EXISTING R/W RETRACEMENT, SEE
C.O.S. NO. S-0004867 & S-0004405

GRID STATE PLANE COORDINATES

THIS IS A STATE PLANE COORDINATE PROJECT. ALL DIMENSIONS, DISTANCES AND AREAS ON THIS PROJECT ARE GRID, EXCEPT FOR THE EXISTING R/W WIDTH DIMENSION, WHICH IS RECORD.
THE COMBINATION SCALE FACTOR IS 0.99928049

MONTANA DEPARTMENT OF TRANSPORTATION

RIGHT OF WAY PLAN

CASCADE COUNTY

SCALE 1" = 100'

0 50' 100' 200' 300'

STATE	RIGHT OF WAY	SHEET NO.	TOTAL SHEETS
MONTANA		20	24
R/W ID.	STPS-STPU 225-1(2)0		
PROJECT NO.	4826-002		

2 KM N OF GREAT FALLS - NORTH

SEE SHEET NO. 3 FOR OWNERSHIP NAMES, ADDRESSES, AREAS, ETC.

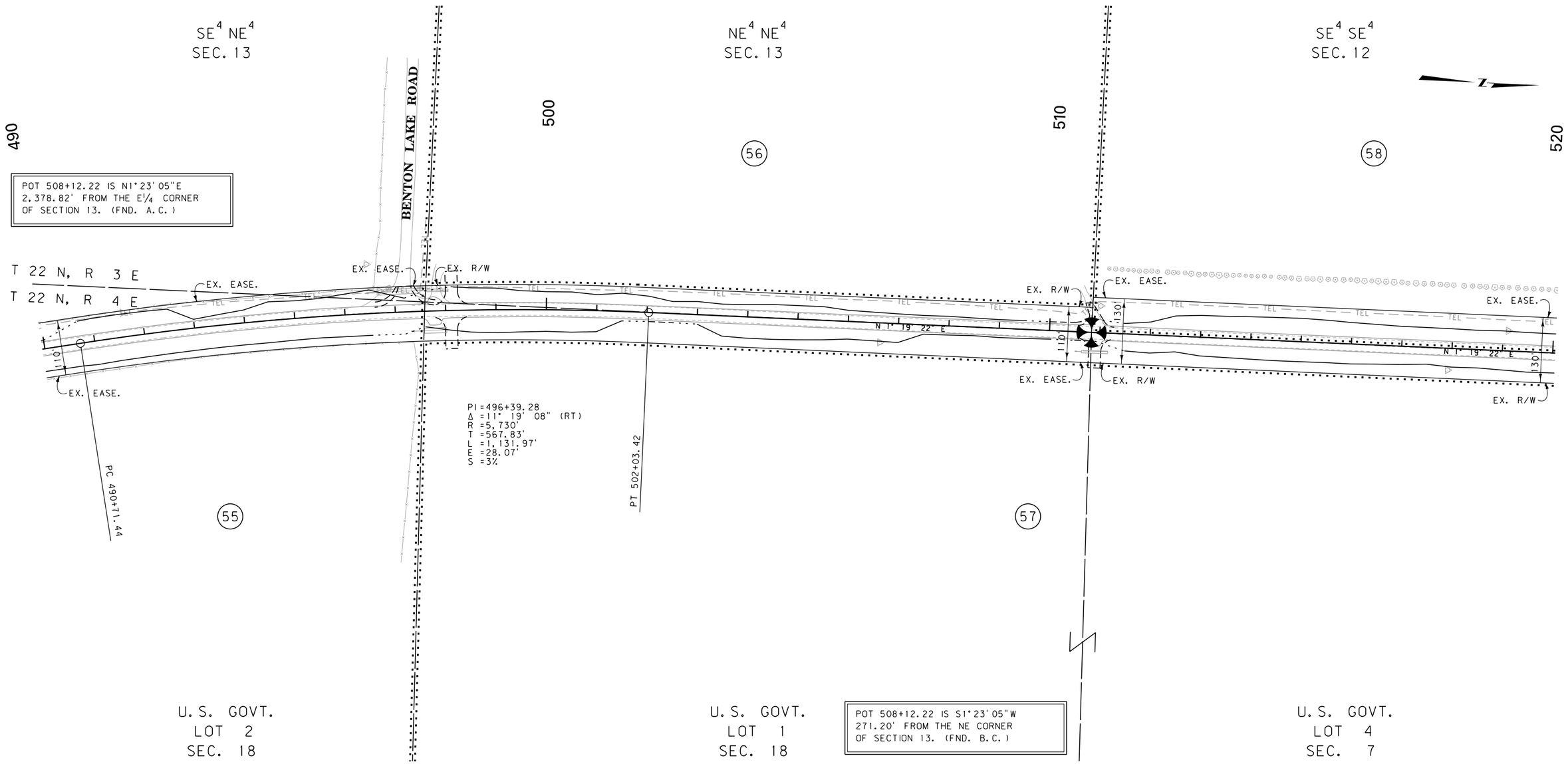

CONSTRUCTION LIMITS	MAP REVISED 10-18-13
CUT SECTION (TOP OF CUT)	
TRANSITION	
TOE OF FILL	
BACKSLOPE LIMITS INCLUDE ROUNDING	FHWA/MDT APPROVAL 12-28-12

3	MDT MONTANA DEPARTMENT OF TRANSPORTATION	c:\dgn\4826ropln006.dgn	
2		1/29/2014	
1		10:59:51 AM	CPS-U1068

NOTES:
1. THE PROPOSED R/W LINE WHERE A SPIRAL CURVE TRANSITION IS USED IS A CHORD RATHER THAN A CONCENTRIC CURVE.
2. ALL STATIONS AND OFFSETS FOR R/W BREAKS ARE IN REFERENCE TO THE R/W BASELINE.

FOR EXISTING R/W RETRACEMENT, SEE
C.O.S. NO. S-0004867 & S-0004405

GRID STATE PLANE COORDINATES

THIS IS A STATE PLANE COORDINATE PROJECT. ALL DIMENSIONS, DISTANCES AND AREAS ON THIS PROJECT ARE GRID, EXCEPT FOR THE EXISTING R/W WIDTH DIMENSION, WHICH IS RECORD.
THE COMBINATION SCALE FACTOR IS 0.99928049

MONTANA DEPARTMENT OF TRANSPORTATION

RIGHT OF WAY PLAN

CASCADE COUNTY

SCALE 1" = 100'

0 50' 100' 200' 300'

STATE	RIGHT OF WAY	SHEET NO.	TOTAL SHEETS
MONTANA		21	24
R/W ID.	STPS-STPU 225-1(2)0		
PROJECT NO.	4826-002		

2 KM N OF GREAT FALLS - NORTH

SEE SHEET NO. 3 FOR OWNERSHIP NAMES, ADDRESSES, AREAS, ETC.

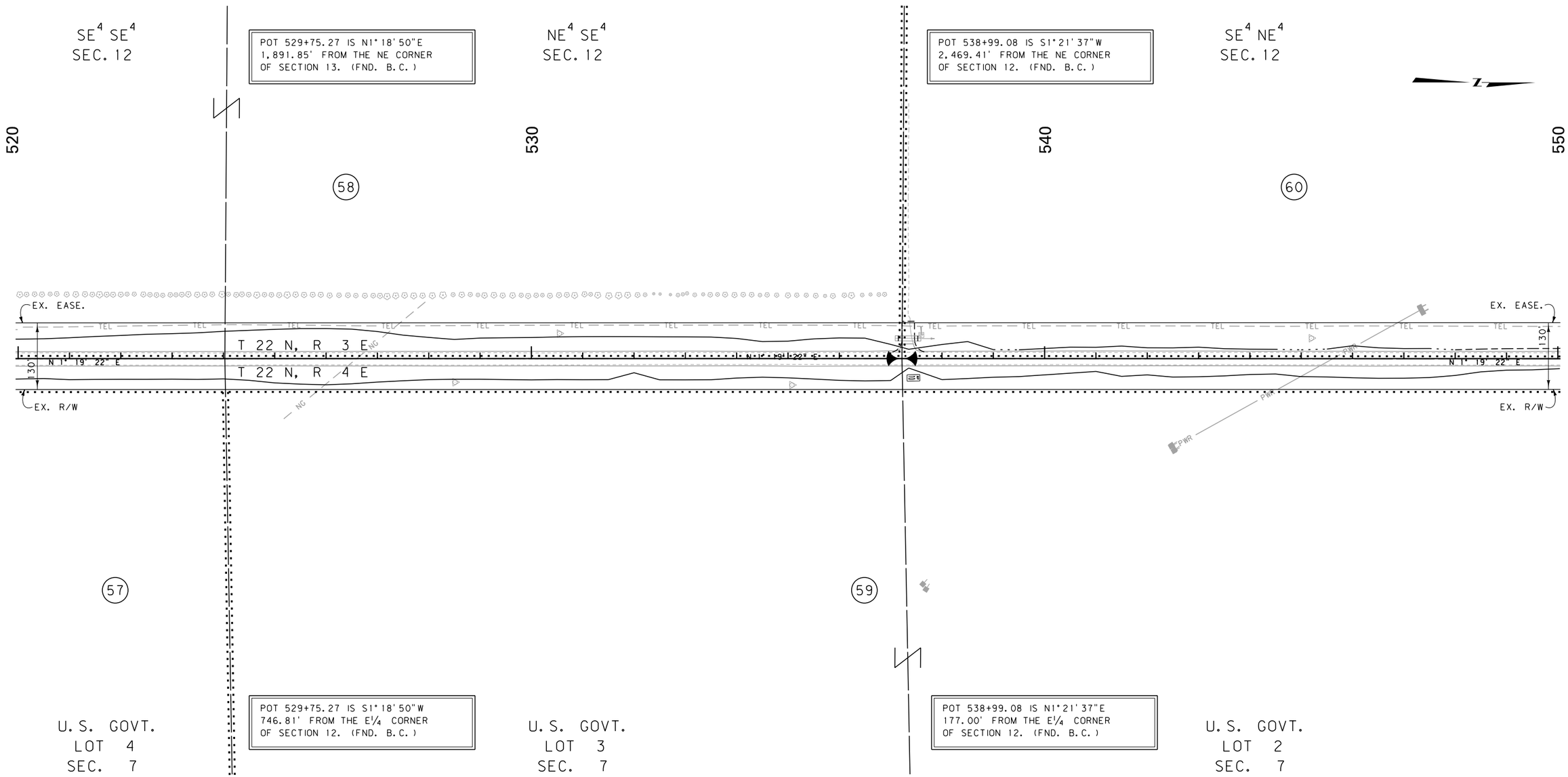

CONSTRUCTION LIMITS	MAP REVISED 10-18-13
CUT SECTION (TOP OF CUT)	
TRANSITION	
TOE OF FILL	
BACKSLOPE LIMITS INCLUDE ROUNDING	FHWA/MDT APPROVAL 12-28-12

3	MDT MONTANA DEPARTMENT OF TRANSPORTATION	c:\dgn\4826ropln006.dgn	
2		1/29/2014	
1		10:59:57 AM	CPS-U1068

NOTES:
1. THE PROPOSED R/W LINE WHERE A SPIRAL CURVE TRANSITION IS USED IS A CHORD RATHER THAN A CONCENTRIC CURVE.
2. ALL STATIONS AND OFFSETS FOR R/W BREAKS ARE IN REFERENCE TO THE R/W BASELINE.

FOR EXISTING R/W RETRACEMENT, SEE
C.O.S. NO. S-0004867 & S-0004405

GRID STATE PLANE COORDINATES

THIS IS A STATE PLANE COORDINATE PROJECT. ALL DIMENSIONS, DISTANCES AND AREAS ON THIS PROJECT ARE GRID, EXCEPT FOR THE EXISTING R/W WIDTH DIMENSION, WHICH IS RECORD.
THE COMBINATION SCALE FACTOR IS 0.99928049

MONTANA DEPARTMENT OF TRANSPORTATION

RIGHT OF WAY PLAN

CASCADE COUNTY

SCALE 1" = 100'

0 50' 100' 200' 300'

STATE	RIGHT OF WAY	SHEET NO.	TOTAL SHEETS
MONTANA		22	24
R/W ID.	STPS-STPU 225-1(2)0		
PROJECT NO.	4826-002		

2 KM N OF GREAT FALLS - NORTH

SEE SHEET NO. 3 FOR OWNERSHIP NAMES, ADDRESSES, AREAS, ETC.

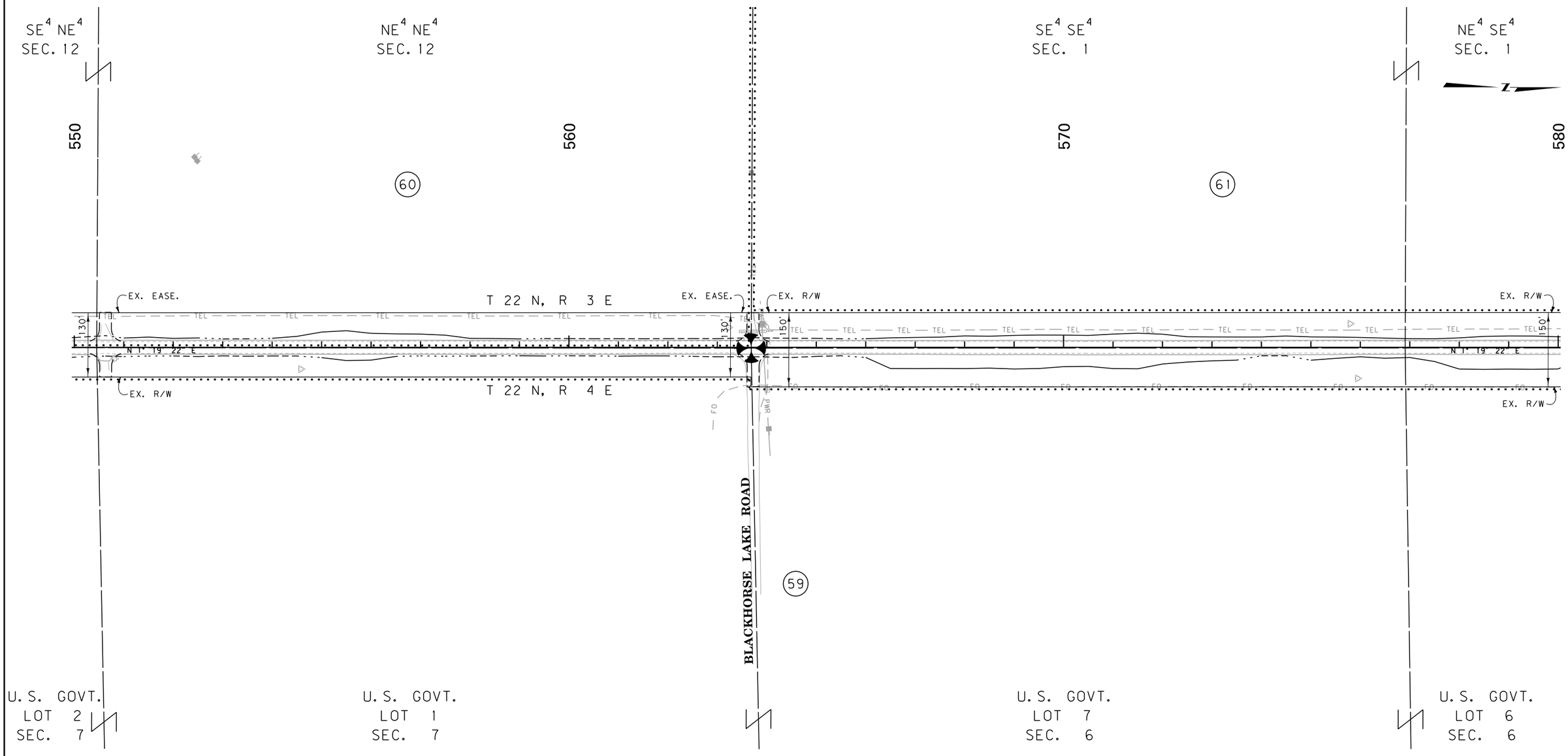

FOR EXISTING R/W RETRACEMENT, SEE
C.O.S. NO. S-0004867 & S-0004405

GRID STATE PLANE COORDINATES

THIS IS A STATE PLANE COORDINATE PROJECT. ALL DIMENSIONS, DISTANCES AND AREAS ON THIS PROJECT ARE GRID, EXCEPT FOR THE EXISTING R/W WIDTH DIMENSION, WHICH IS RECORD.
THE COMBINATION SCALE FACTOR IS 0.99928049

NOTES:
1. THE PROPOSED R/W LINE WHERE A SPIRAL CURVE TRANSITION IS USED IS A CHORD RATHER THAN A CONCENTRIC CURVE.
2. ALL STATIONS AND OFFSETS FOR R/W BREAKS ARE IN REFERENCE TO THE R/W BASELINE.

CONSTRUCTION LIMITS
CUT SECTION (TOP OF CUT)
TRANSITION
TOE OF FILL
BACKSLOPE LIMITS INCLUDE ROUNDING

MAP REVISED 10-18-13

FHWA/MDT APPROVAL
12-28-12

3	MDT MONTANA DEPARTMENT OF TRANSPORTATION	c:\dgn\4826ropln007.dgn
2		1/29/2014
1		11:01:00 AM CPS-U1068

MONTANA DEPARTMENT OF TRANSPORTATION
RIGHT OF WAY PLAN
CASCADE COUNTY
SCALE 1"=100'
0 50' 100' 200' 300'

STATE	RIGHT OF WAY	SHEET NO.	TOTAL SHEETS
MONTANA		23	24
R/W ID.	STPS-STPU 225-1(2)0		
PROJECT NO.	4826-002		

2 KM N OF GREAT FALLS - NORTH

SEE SHEET NO. 3 FOR OWNERSHIP NAMES, ADDRESSES, AREAS, ETC.

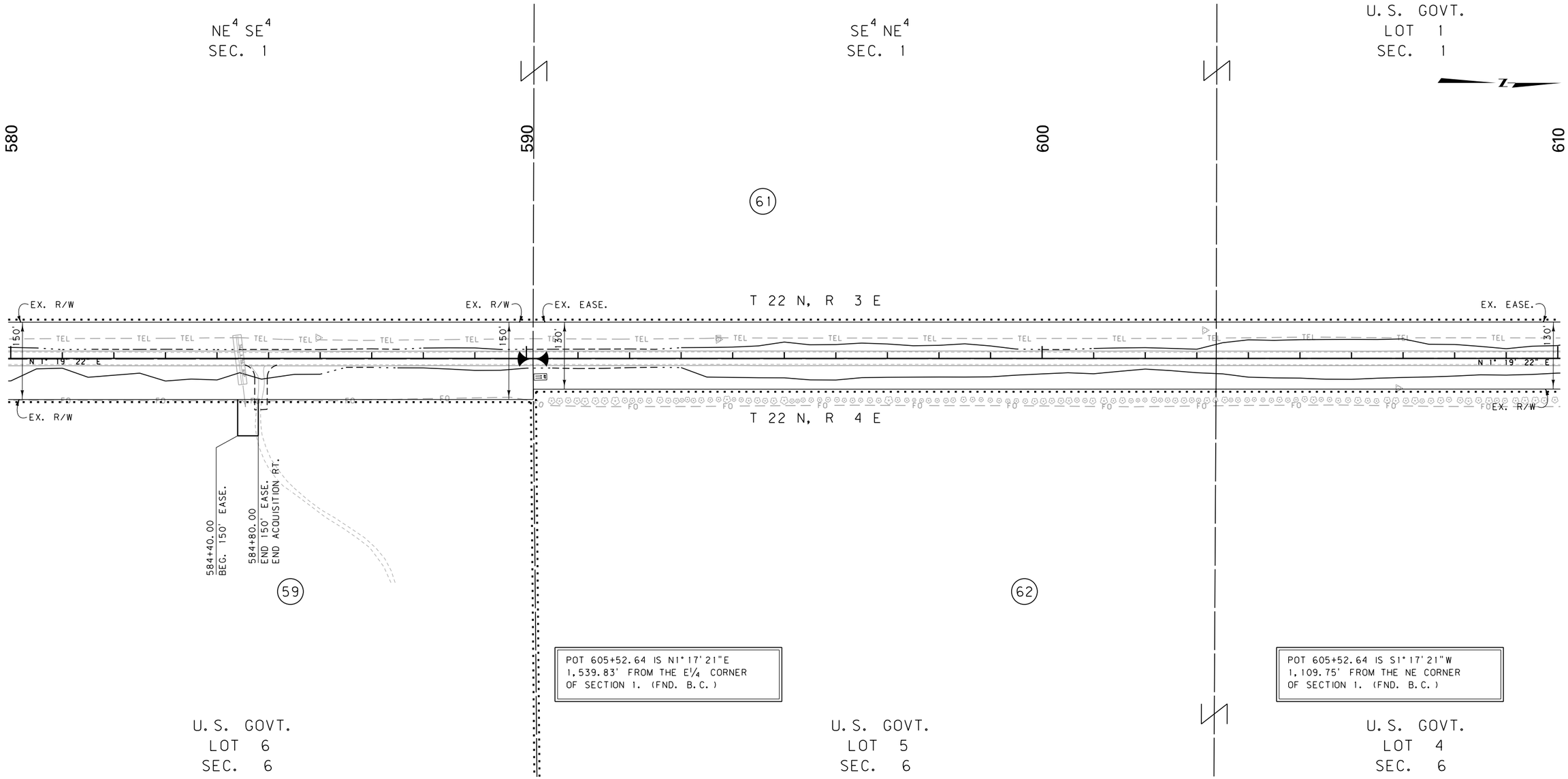

CONSTRUCTION LIMITS	MAP REVISED 7-23-13 10-18-13
CUT SECTION (TOP OF CUT)	
TRANSITION	
TOE OF FILL	
BACKSLOPE LIMITS INCLUDE ROUNDING	FHWA/MDT APPROVAL 12-28-12

3	MDT MONTANA DEPARTMENT OF TRANSPORTATION	c:\dgn\4826ropln007.dgn	
2		1/29/2014	
1		11:01:06 AM	CPS-U1068

NOTES:
1. THE PROPOSED R/W LINE WHERE A SPIRAL CURVE TRANSITION IS USED IS A CHORD RATHER THAN A CONCENTRIC CURVE.
2. ALL STATIONS AND OFFSETS FOR R/W BREAKS ARE IN REFERENCE TO THE R/W BASELINE.

FOR EXISTING R/W RETRACEMENT, SEE
C.O.S. NO. S-0004867 & S-0004405

GRID STATE PLANE COORDINATES

THIS IS A STATE PLANE COORDINATE PROJECT. ALL DIMENSIONS, DISTANCES AND AREAS ON THIS PROJECT ARE GRID, EXCEPT FOR THE EXISTING R/W WIDTH DIMENSION, WHICH IS RECORD.
THE COMBINATION SCALE FACTOR IS 0.99928049

MONTANA DEPARTMENT OF TRANSPORTATION

RIGHT OF WAY PLAN

CASCADE COUNTY

SCALE 1" = 100'

0 50' 100' 200' 300'

STATE	RIGHT OF WAY	SHEET NO.	TOTAL SHEETS
MONTANA		24	24
R/W ID.	STPS-STPU 225-1(2)10		
PROJECT NO.	4826-002		

2 KM N OF GREAT FALLS - NORTH

SEE SHEET NO. 2-3 FOR OWNERSHIP NAMES, ADDRESSES, AREAS, ETC.

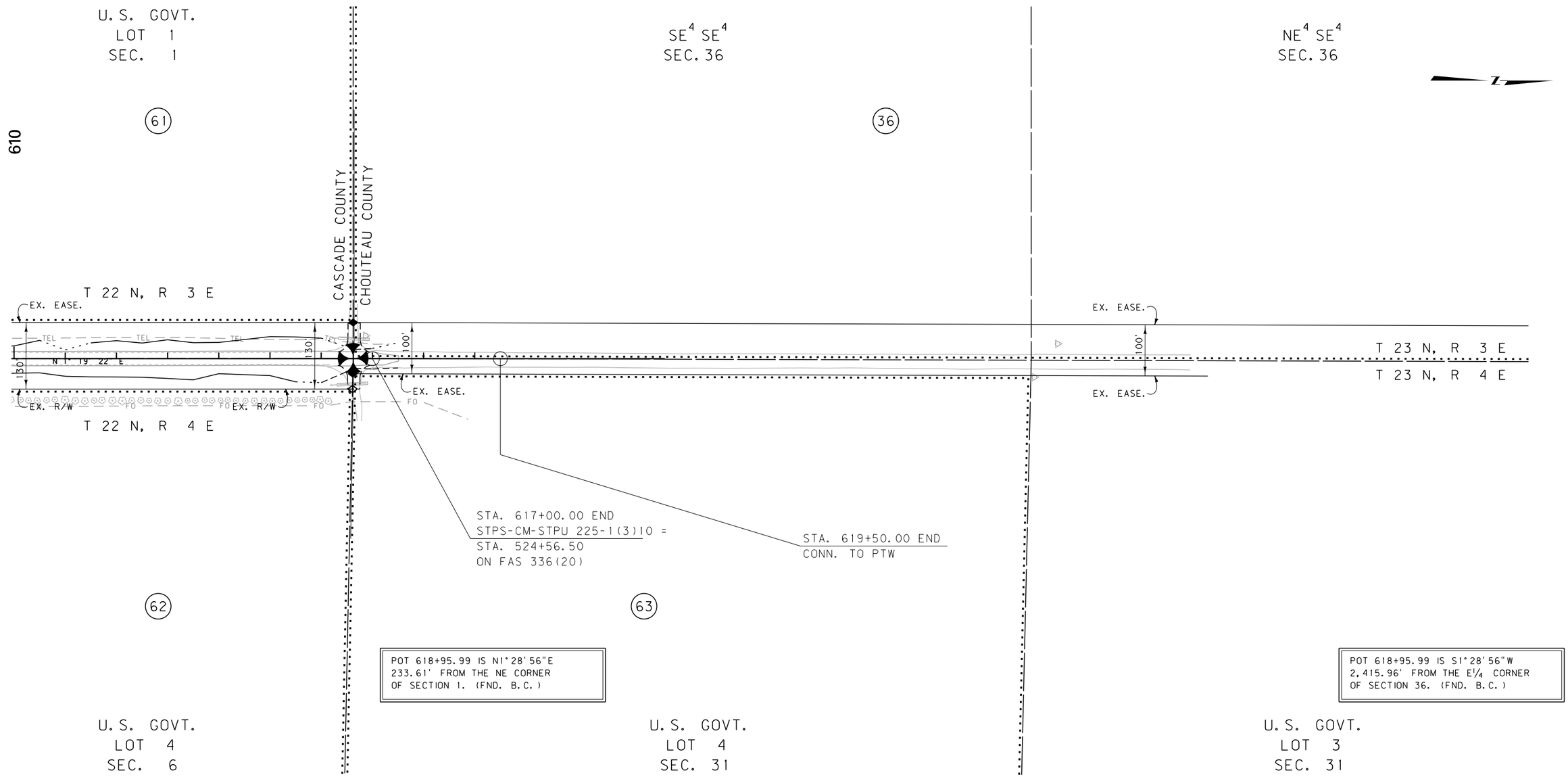

CONSTRUCTION LIMITS	MAP REVISED 7-23-13 10-18-13
CUT SECTION — TOP OF CUT	
TRANSITION	
TOE OF FILL	
BACKSLOPE LIMITS INCLUDE ROUNDING	FHWA/MDT APPROVAL 12-28-12

3	MDT MONTANA DEPARTMENT OF TRANSPORTATION	c:\dgn\4826ropln007.dgn
2		1/29/2014
1		11:01:12 AM CPS-U1068

NOTES:
1. THE PROPOSED R/W LINE WHERE A SPIRAL CURVE TRANSITION IS USED IS A CHORD RATHER THAN A CONCENTRIC CURVE.
2. ALL STATIONS AND OFFSETS FOR R/W BREAKS ARE IN REFERENCE TO THE R/W BASELINE.

FOR EXISTING R/W RETRACEMENT, SEE
C.O.S. NO. S-0004867 & S-0004405

GRID STATE PLANE COORDINATES

THIS IS A STATE PLANE COORDINATE PROJECT. ALL DIMENSIONS, DISTANCES AND AREAS ON THIS PROJECT ARE GRID, EXCEPT FOR THE EXISTING R/W WIDTH DIMENSION, WHICH IS RECORD.
THE COMBINATION SCALE FACTOR IS 0.99928049

MONTANA DEPARTMENT OF TRANSPORTATION

RIGHT OF WAY PLAN

CASCADE & CHOUTEAU COUNTIES

SCALE 1" = 100'

0 50' 100' 200' 300'