MONTANA DEPARTMENT OF TRANSPORTATION

STATE	RIGHT OF WAY	SHEET NO.	TOTAL SHEETS
MONTANA		1	24
R/W ID.	MT DOT 236(1)		
PROJECT NO.	9137-016-000		

MT 236 SOUTH OF BIG SANDY

RIGHT OF WAY PLAN
FEDERAL AID PROJECT MT DOT 236(1)
MT 236 SOUTH OF BIG SANDY

CHOUTEAU COUNTY

LENGTH 12.2 MILES

SEE SHEET NO. 2 FOR OWNERSHIP NAMES, ADDRESSES, AREAS, ETC.

PLAN LEGEND

- PROPOSED RIGHT OF WAY LINE
- EXISTING RIGHT OF WAY LINE
- RAILROAD RIGHT OF WAY LINE
- RIGHT OF WAY BASELINE
- STK'D CENTERLINE
- SECTION LINE
- OWNERSHIP BOUNDARY
- FULL ACCESS CONTROL (AC)
- LIMITED ACCESS CONTROL
- EXISTING FULL ACCESS CONTROL (EFAC)
- EXISTING LIMITED ACCESS CONTROL (ELAC)
- PRESENT TRAVELED WAY (P.T.W.)
- FENCE LINE
- EXISTING GUARDRAIL
- PROPOSED GUARDRAIL
- GATE IN FENCE
- CATTLE GUARD: EXIST. - PROPOSED
- SECTION CORNER (FOUND / UNFOUND)
- ¼ SECTION CORNER
- CLOSING CORNER
- MEANDER CORNER
- CENTER OF SECTION
- 1/16 SECTION CORNER FOUND
- RIGHT OF WAY MONUMENT (FOUND / CALCULATED)
- PROPERTY CORNER PIN
- POWER POLE IN PLACE
- TELEPHONE POLE IN PLACE
- TELEGRAPH POLE IN PLACE
- LIGHT POLE
- PROPOSED CULVERT
- EXISTING CULVERT
- OUTLET DITCH
- INLET DITCH
- EXISTING DITCH
- CHANNEL CHANGES (CH. CH.)
- DITCH BLOCK
- RIPRAP
- BRIDGES
- RAILROADS
- PARCEL NUMBERS (2)
- APPROACH: EXIST.- PROPOSED

N

END PROJECT
MT DOT 236(1)(JUDITH LANDING ROAD)
SOUTH OF BIG SANDY
952+56.26
MP 74.16

BEGIN PROJECT
MT DOT 236(1)(JUDITH LANDING ROAD)
SOUTH OF BIG SANDY
311+00.00
MP 62.01

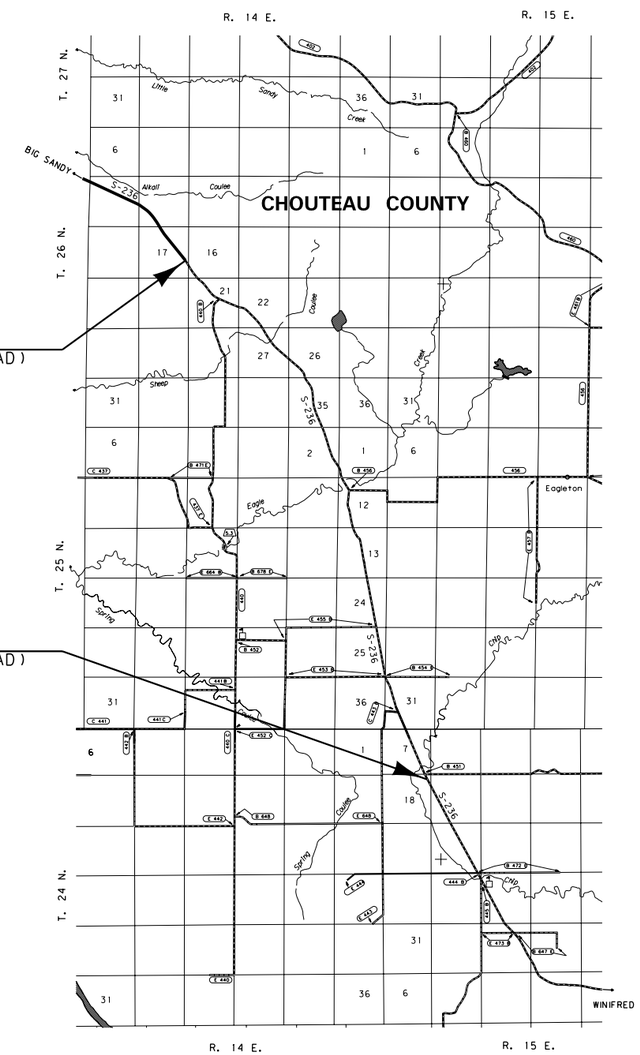

ASSOCIATED PROJECTS

RELATED PROJECTS
S 115(2)
RS 236-2(2)65

CONSTRUCTION LIMITS
CUT SECTION (TOP OF CUT)
TRANSITION
TOE OF FILL
BACKSLOPE LIMITS INCLUDE ROUNDING

MAP REVISED

FHWA/MDT APPROVAL
1-13-16

MDT MONTANA DEPARTMENT OF TRANSPORTATION

c:\dgn\9137000rotl001.dgn
5/26/2016
11:27:34 AM CPS - U1068

STATE	RIGHT OF WAY	SHEET NO.	TOTAL SHEETS
MONTANA		2	24
R/W ID.	MT DOT 236(1)		
PROJECT NO.	9137-016-000		

MT 236 SOUTH OF BIG SANDY

OWNERSHIP

PARCEL	NAME	ADDRESS	TOTAL AREA	GROSS R/W AREA	EX. EASE. AREA	NET AREA	REMAINDER LEFT	REMAINDER RIGHT	CONST. PMT. AREA	EASEMENT AREA	SHEET NO.
1	THE BYPASS TRUST UNDER THE WILL OF EDWARD J YIRSA	PO BOX 2309, GREAT FALLS, MT 59403	OWNER NOTIFICATION ONLY								3
2	THE BYPASS TRUST UNDER THE WILL OF EDWARD J YIRSA	PO BOX 2309, GREAT FALLS, MT 59403	OWNER NOTIFICATION ONLY								3
3	ANN K BITZ	250 D & B LANE, BIG SANDY, MT 59520	FOR NEGOTIATIONS ONLY								3-5
4	ANN K BITZ	250 D & B LANE, BIG SANDY, MT 59520	FOR NEGOTIATIONS ONLY								3-5
5	ANN M BEELER	600 ROUNDHOUSE DR UNIT 302, LAUREL, MT 59044	FOR NEGOTIATIONS ONLY								4-6
6	ANN M BEELER	600 ROUNDHOUSE DR UNIT 302, LAUREL, MT 59044	FOR NEGOTIATIONS ONLY								5-6
7	GERALD RUTLEDGE A/K/A GERALD E RUTLEDGE	PO BOX 557, BIG SANDY, MT 59520	FOR NEGOTIATIONS ONLY								6-9
8	GERALD RUTLEDGE A/K/A GERALD E RUTLEDGE	PO BOX 557, BIG SANDY, MT 59520	FOR NEGOTIATIONS ONLY								6-9
9	ROBERT C YIRSA	PO BOX 545, BIG SANDY, MT 59520	FOR NEGOTIATIONS ONLY								9-12
10	ROBERT C YIRSA	PO BOX 545, BIG SANDY, MT 59520	FOR NEGOTIATIONS ONLY								9-12
11	KENNETH & DARLEEN DARLINGTON	16495 JUDITH LANDING RD, BIG SANDY, MT 59520	OWNER NOTIFICATION ONLY								12-13
12	KENNETH & DARLEEN DARLINGTON	16495 JUDITH LANDING RD, BIG SANDY, MT 59520	FOR NEGOTIATIONS ONLY								12-13
13	GASVODA AND SONS, INC	21024 JUDITH LANDING RD, BIG SANDY, MT 59520	FOR NEGOTIATIONS ONLY								13-18
14	IX RANCH COMPANY	PO BOX 489, BIG SANDY, MT 59520	FOR NEGOTIATIONS ONLY								13-16
15	GEORGIA GASVODA	21024 JUDITH LANDING RD, BIG SANDY, MT 59520	OWNER NOTIFICATION ONLY								14
16	IX RANCH COMPANY	PO BOX 489, BIG SANDY, MT 59520	FOR NEGOTIATIONS ONLY								14
17	GASVODA AND SONS, INC	21024 JUDITH LANDING RD, BIG SANDY, MT 59520	FOR NEGOTIATIONS ONLY								16-18
18	STATE OF MONTANA	1625 11TH AVENUE, HELENA, MT 59601	OWNER NOTIFICATION ONLY								17-19
19	GASVODA AND SONS, INC	21024 JUDITH LANDING RD, BIG SANDY, MT 59520	OWNER NOTIFICATION ONLY								19
20	GASVODA AND SONS, INC	21024 JUDITH LANDING RD, BIG SANDY, MT 59520	OWNER NOTIFICATION ONLY								19
21	GLENN E SKAALURE	14690 JUDITH LANDING RD, BIG SANDY, MT 59520	FOR NEGOTIATIONS ONLY								19-22
22	GLENN E SKAALURE	14690 JUDITH LANDING RD, BIG SANDY, MT 59520	FOR NEGOTIATIONS ONLY								19-20
23	IX RANCH COMPANY	PO BOX 489, BIG SANDY, MT 59520	FOR NEGOTIATIONS ONLY								20
24	GLENN E SKAALURE	14690 JUDITH LANDING RD, BIG SANDY, MT 59520	OWNER NOTIFICATION ONLY								20-21
25	MIDWAY RANCH, INC	16495 JUDITH LANDING RD, BIG SANDY, MT 59520	OWNER NOTIFICATION ONLY								21
26	MIDWAY RANCH, INC	16495 JUDITH LANDING RD, BIG SANDY, MT 59520	FOR NEGOTIATIONS ONLY								21-23
27	GLENN E SKAALURE	14690 JUDITH LANDING RD, BIG SANDY, MT 59520	OWNER NOTIFICATION ONLY								21-22
28	MIDWAY RANCH, INC	16495 JUDITH LANDING RD, BIG SANDY, MT 59520	FOR NEGOTIATIONS ONLY								22-23
29	STATE OF MONTANA	1625 11TH AVENUE, HELENA, MT 59601	OWNER NOTIFICATION ONLY								23-24
30	MIDWAY RANCH, INC	16495 JUDITH LANDING RD, BIG SANDY, MT 59520	FOR NEGOTIATIONS ONLY								24
31	MIDWAY RANCH, INC	16495 JUDITH LANDING RD, BIG SANDY, MT 59520	FOR NEGOTIATIONS ONLY								24
32	TRIANGLE TELEPHONE ASSOCIATION	2121 US HIGHWAY 2, HAVRE, MT 59501	FOR NEGOTIATIONS ONLY								14

CONSTRUCTION LIMITS
CUT SECTION (TOP OF CUT)
TRANSITION
TOE OF FILL
BACKSLOPE LIMITS INCLUDE ROUNDING

MAP REVISED 5-26-16

FHWA/MDT APPROVAL
1-13-16

3	MDT MONTANA DEPARTMENT OF TRANSPORTATION	c:\dgn\9137000roown001.dgn
2		5/26/2016
1		11:27:42 AM CPS - U1068

NOTES:
1. THE PROPOSED R/W LINE WHERE A SPIRAL CURVE TRANSITION IS USED IS A CHORD RATHER THAN A CONCENTRIC CURVE.
2. ALL STATIONS AND OFFSETS FOR R/W BREAKS ARE IN REFERENCE TO THE R/W BASELINE.

MONTANA DEPARTMENT OF TRANSPORTATION
RIGHT OF WAY PLAN
CHOUTEAU COUNTY

STATE	RIGHT OF WAY	SHEET NO.	TOTAL SHEETS
MONTANA		3	24
R/W ID.		MT DOT 236(1)	
PROJECT NO.		9137-016-000	

MT 236 SOUTH OF BIG SANDY

SEE SHEET NO. 2 FOR OWNERSHIP NAMES, ADDRESSES, AREAS, ETC.

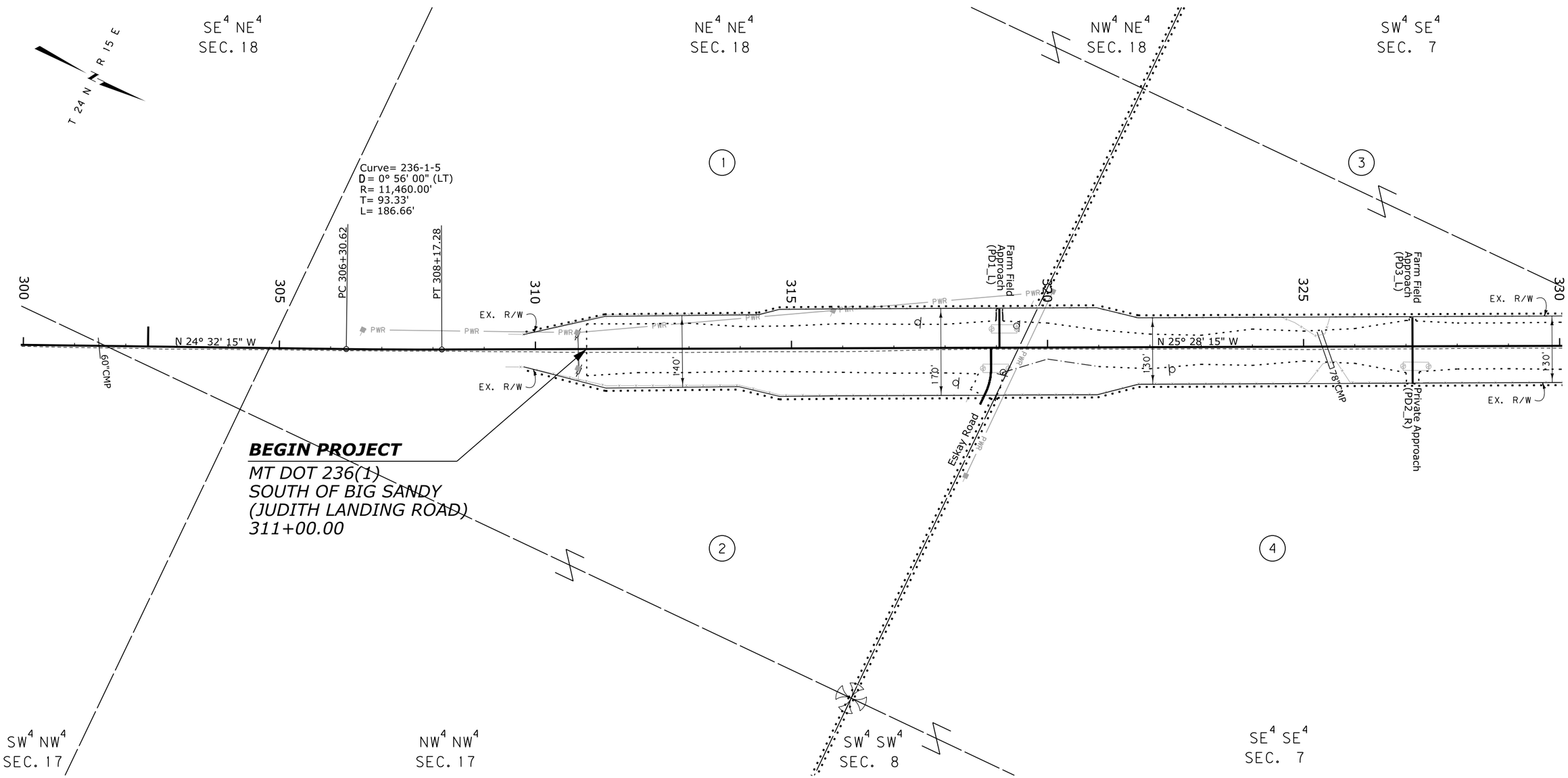

CONSTRUCTION LIMITS	MAP REVISED
CUT SECTION (TOP OF CUT)	
TRANSITION	
TOE OF FILL	
BACKSLOPE LIMITS INCLUDE ROUNDING	FHWA/MDT APPROVAL 1-13-16

3	MDT MONTANA DEPARTMENT OF TRANSPORTATION	c:\dgn\9137000ropln001.dgn
2		5/26/2016
1		11:29:20 AM CPS - U1068

NOTES:
1. THE PROPOSED R/W LINE WHERE A SPIRAL CURVE TRANSITION IS USED IS A CHORD RATHER THAN A CONCENTRIC CURVE.
2. ALL STATIONS AND OFFSETS FOR R/W BREAKS ARE IN REFERENCE TO THE R/W BASELINE.

MONTANA DEPARTMENT OF TRANSPORTATION

RIGHT OF WAY PLAN

CHOUTEAU COUNTY

SCALE 1" = 100'

0 50' 100' 200' 300'

STATE	RIGHT OF WAY	SHEET NO.	TOTAL SHEETS
MONTANA		4	24
R/W ID.		MT DOT 236(1)	
PROJECT NO.		9137-016-000	

MT 236 SOUTH OF BIG SANDY

SEE SHEET NO. 2 FOR OWNERSHIP NAMES, ADDRESSES, AREAS, ETC.

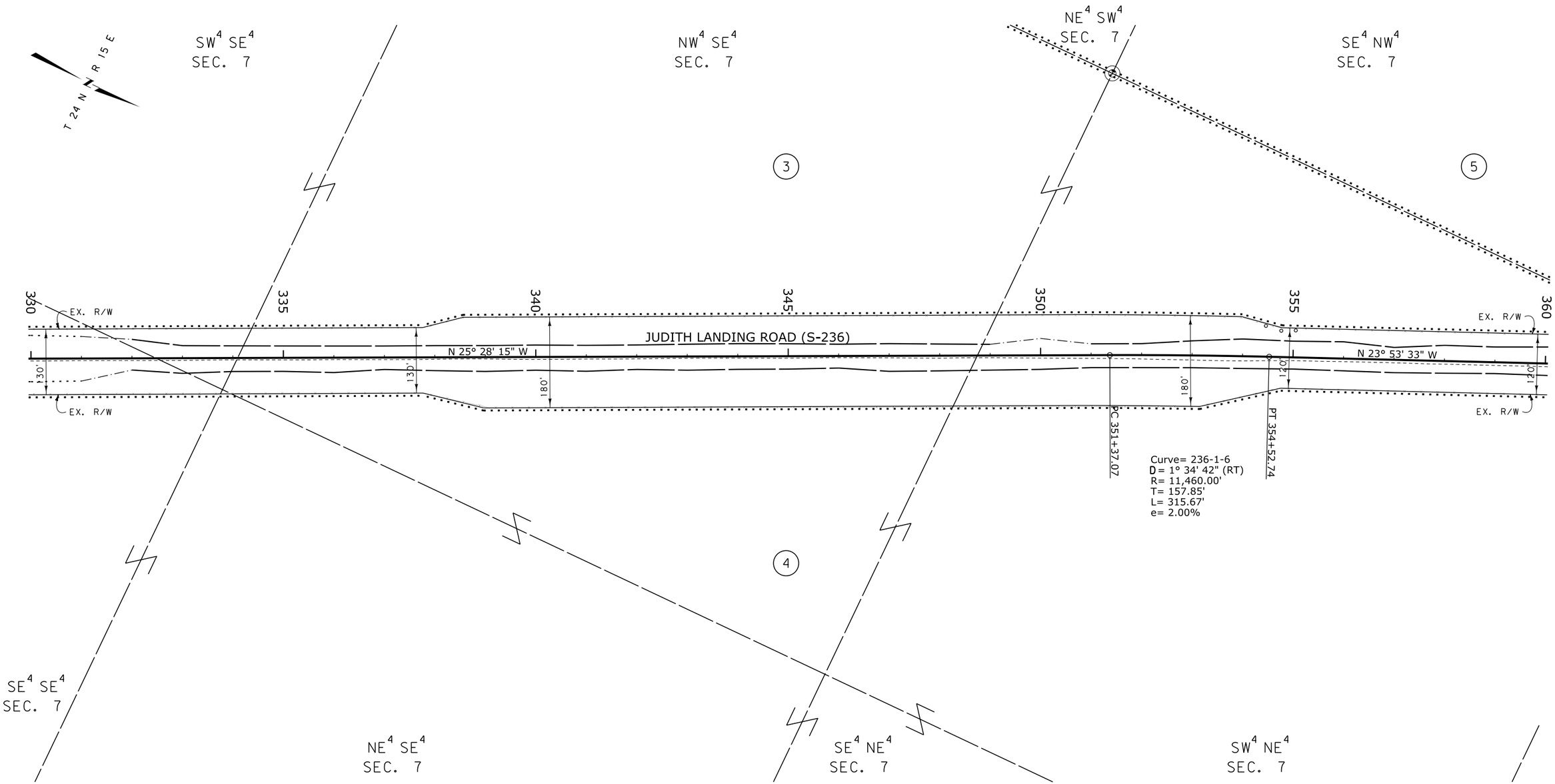

CONSTRUCTION LIMITS
CUT SECTION — TOP OF CUT
TRANSITION
TOE OF FILL
BACKSLOPE LIMITS INCLUDE ROUNDING

MAP REVISED

FHWA/MDT APPROVAL
1-13-16

3
2
1

MDT MONTANA DEPARTMENT OF TRANSPORTATION

c:\dgn\9137000ropln001.dgn
5/26/2016
11:29:23 AM CPS - U1068

NOTES:
1. THE PROPOSED R/W LINE WHERE A SPIRAL CURVE TRANSITION IS USED IS A CHORD RATHER THAN A CONCENTRIC CURVE.
2. ALL STATIONS AND OFFSETS FOR R/W BREAKS ARE IN REFERENCE TO THE R/W BASELINE.

MONTANA DEPARTMENT OF TRANSPORTATION
RIGHT OF WAY PLAN
CHOUTEAU COUNTY
SCALE 1" = 100'
0 50' 100' 200' 300'

STATE	RIGHT OF WAY	SHEET NO.	TOTAL SHEETS
MONTANA		5	24
R/W ID.		MT DOT 236(1)	
PROJECT NO.		9137-016-000	

MT 236 SOUTH OF BIG SANDY

SEE SHEET NO. 2 FOR OWNERSHIP NAMES, ADDRESSES, AREAS, ETC.

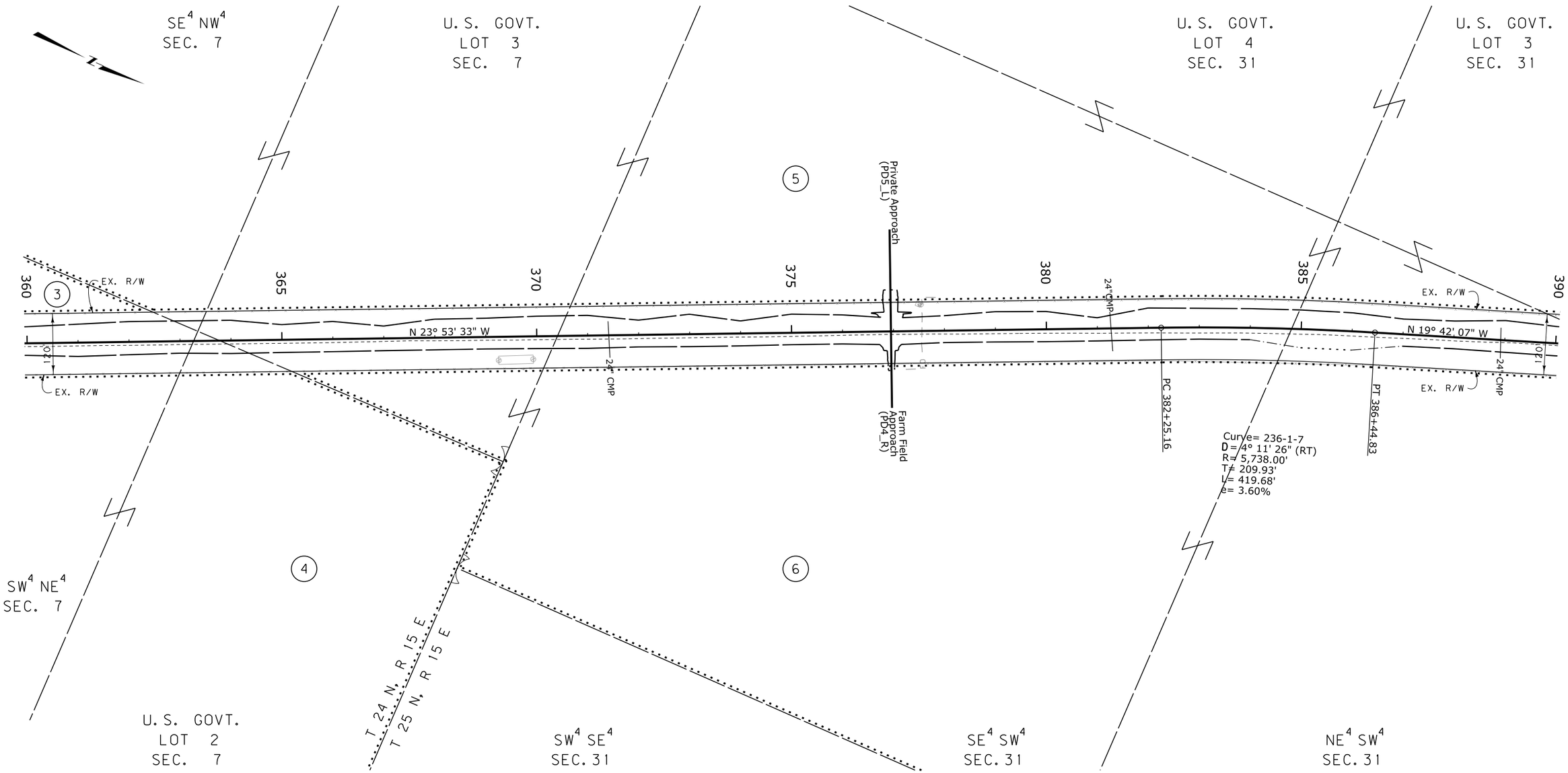

CONSTRUCTION LIMITS
CUT SECTION (TOP OF CUT)
TRANSITION
TOE OF FILL
BACKSLOPE LIMITS INCLUDE ROUNDING

MAP REVISED

FHWA/MDT APPROVAL
1-13-16

3	MDT MONTANA DEPARTMENT OF TRANSPORTATION	c:\dgn\9137000ropln001.dgn
2		5/26/2016
1		11:29:27 AM CPS-U1068

NOTES:
1. THE PROPOSED R/W LINE WHERE A SPIRAL CURVE TRANSITION IS USED IS A CHORD RATHER THAN A CONCENTRIC CURVE.
2. ALL STATIONS AND OFFSETS FOR R/W BREAKS ARE IN REFERENCE TO THE R/W BASELINE.

MONTANA DEPARTMENT OF TRANSPORTATION
RIGHT OF WAY PLAN
CHOUTEAU COUNTY
SCALE 1" = 100'
0 50' 100' 200' 300'

STATE	RIGHT OF WAY	SHEET NO.	TOTAL SHEETS
MONTANA		6	24
R/W ID.		MT DOT 236(1)	
PROJECT NO.		9137-016-000	

MT 236 SOUTH OF BIG SANDY

SEE SHEET NO. 2 FOR OWNERSHIP NAMES, ADDRESSES, AREAS, ETC.

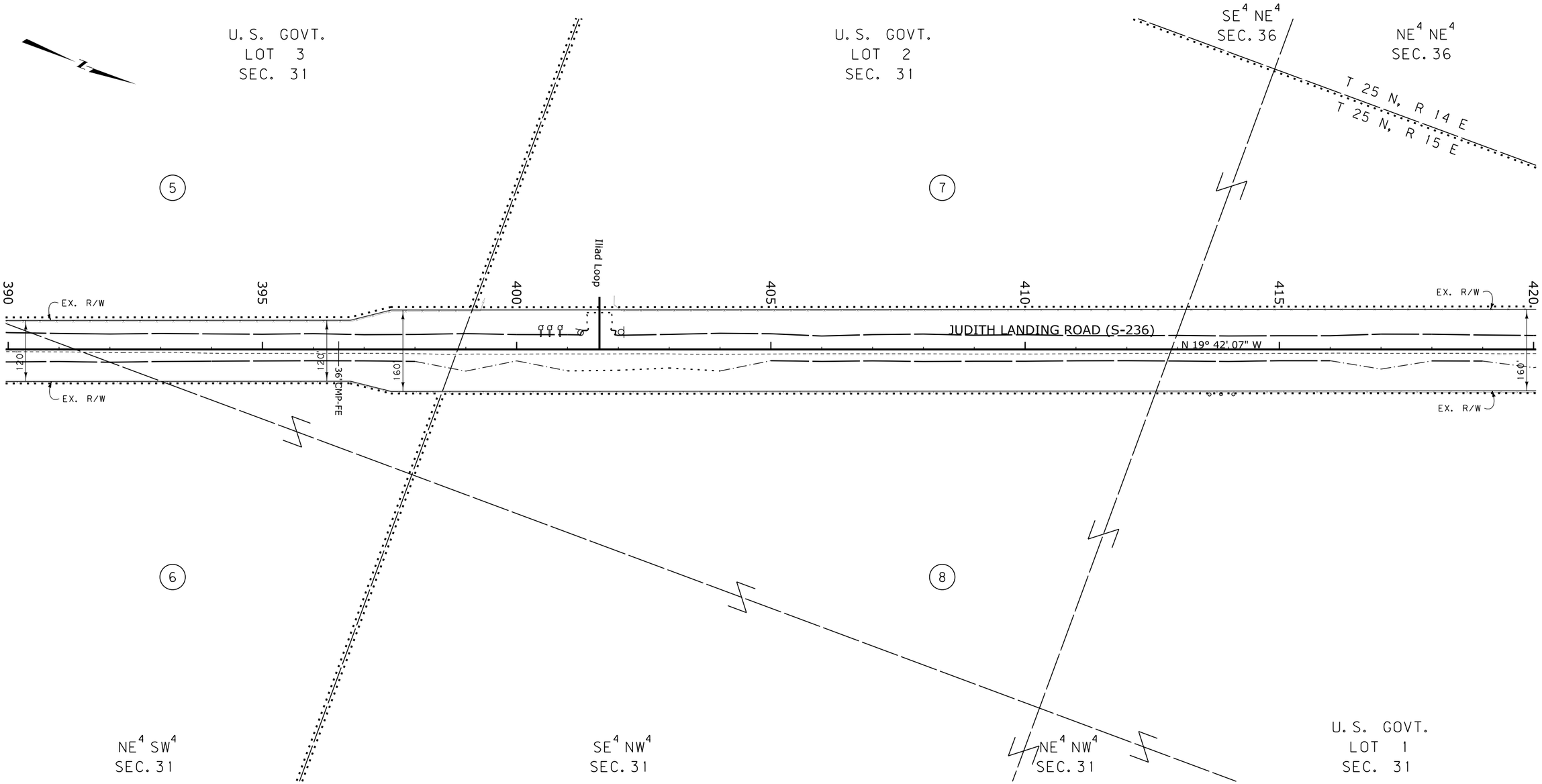

CONSTRUCTION LIMITS	MAP REVISED
CUT SECTION (TOP OF CUT)	
TRANSITION	
TOE OF FILL	
BACKSLOPE LIMITS INCLUDE ROUNDING	FHWA/MDT APPROVAL 1-13-16

3	MDT MONTANA DEPARTMENT OF TRANSPORTATION	c:\dgn\9137000ropln002.dgn
2		5/26/2016
1		11:29:37 AM CPS - U1068

NOTES:
1. THE PROPOSED R/W LINE WHERE A SPIRAL CURVE TRANSITION IS USED IS A CHORD RATHER THAN A CONCENTRIC CURVE.
2. ALL STATIONS AND OFFSETS FOR R/W BREAKS ARE IN REFERENCE TO THE R/W BASELINE.

MONTANA DEPARTMENT OF TRANSPORTATION

RIGHT OF WAY PLAN

CHOUTEAU COUNTY

SCALE 1" = 100'

0 50' 100' 200' 300'

STATE	RIGHT OF WAY	SHEET NO.	TOTAL SHEETS
MONTANA		7	24
R/W ID.		MT DOT 236(1)	
PROJECT NO.		9137-016-000	

MT 236 SOUTH OF BIG SANDY

SEE SHEET NO. 2 FOR OWNERSHIP NAMES, ADDRESSES, AREAS, ETC.

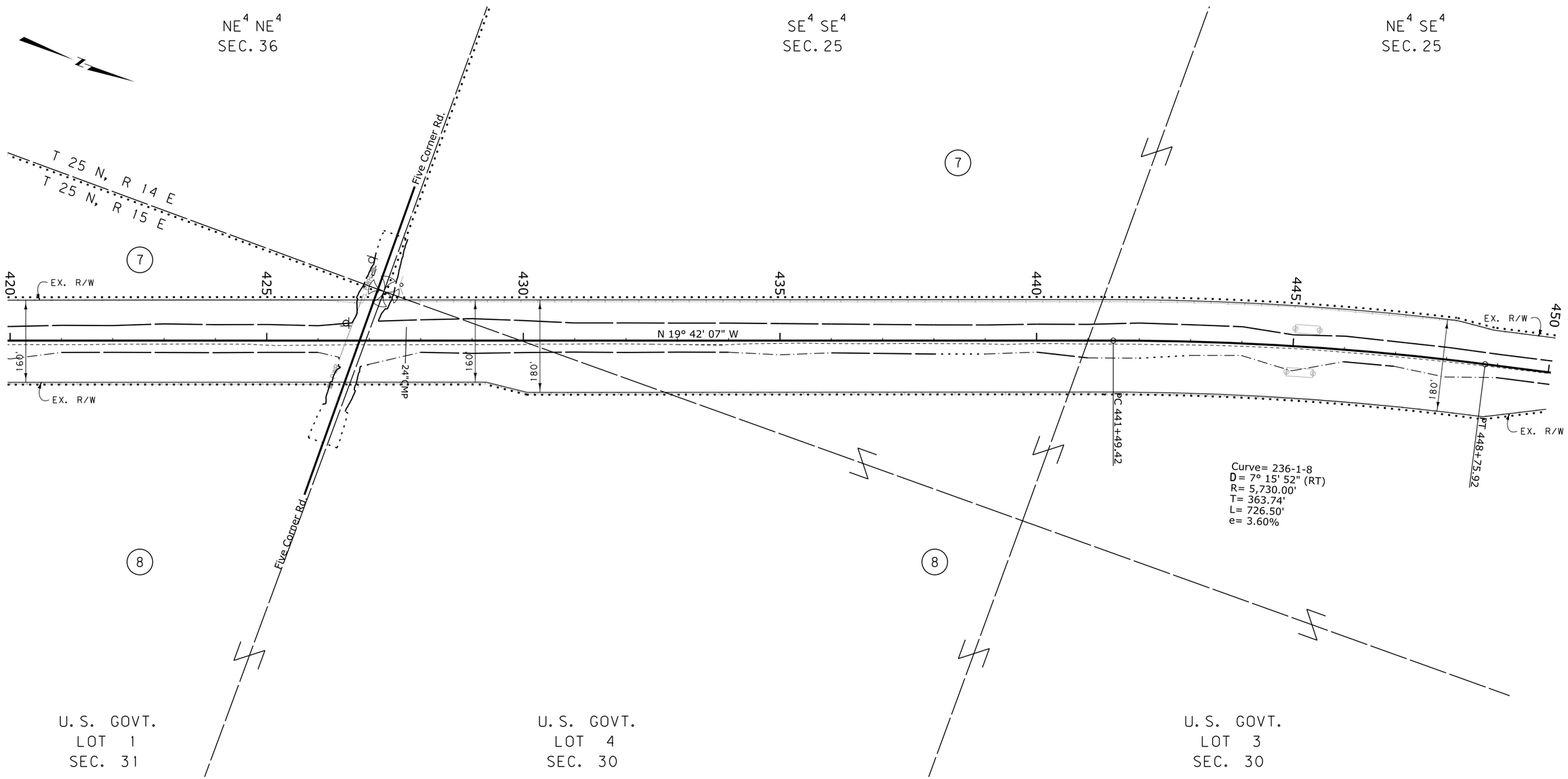

CONSTRUCTION LIMITS	MAP REVISED
CUT SECTION (TOP OF CUT)	
TRANSITION	
TOE OF FILL	
BACKSLOPE LIMITS INCLUDE ROUNDING	FHWA/MDT APPROVAL 1-13-16

3	MDT MONTANA DEPARTMENT OF TRANSPORTATION	c:\dgn\9137000ropln002.dgn
2		5/26/2016
1		11:29:40 AM CPS-U1068

NOTES:
1. THE PROPOSED R/W LINE WHERE A SPIRAL CURVE TRANSITION IS USED IS A CHORD RATHER THAN A CONCENTRIC CURVE.
2. ALL STATIONS AND OFFSETS FOR R/W BREAKS ARE IN REFERENCE TO THE R/W BASELINE.

MONTANA DEPARTMENT OF TRANSPORTATION

RIGHT OF WAY PLAN

CHOUTEAU COUNTY

SCALE 1" = 100'

0 50' 100' 200' 300'

STATE	RIGHT OF WAY	SHEET NO.	TOTAL SHEETS
MONTANA		8	24
R/W ID.		MT DOT 236(1)	
PROJECT NO.		9137-016-000	

MT 236 SOUTH OF BIG SANDY

SEE SHEET NO. 2 FOR OWNERSHIP NAMES, ADDRESSES, AREAS, ETC.

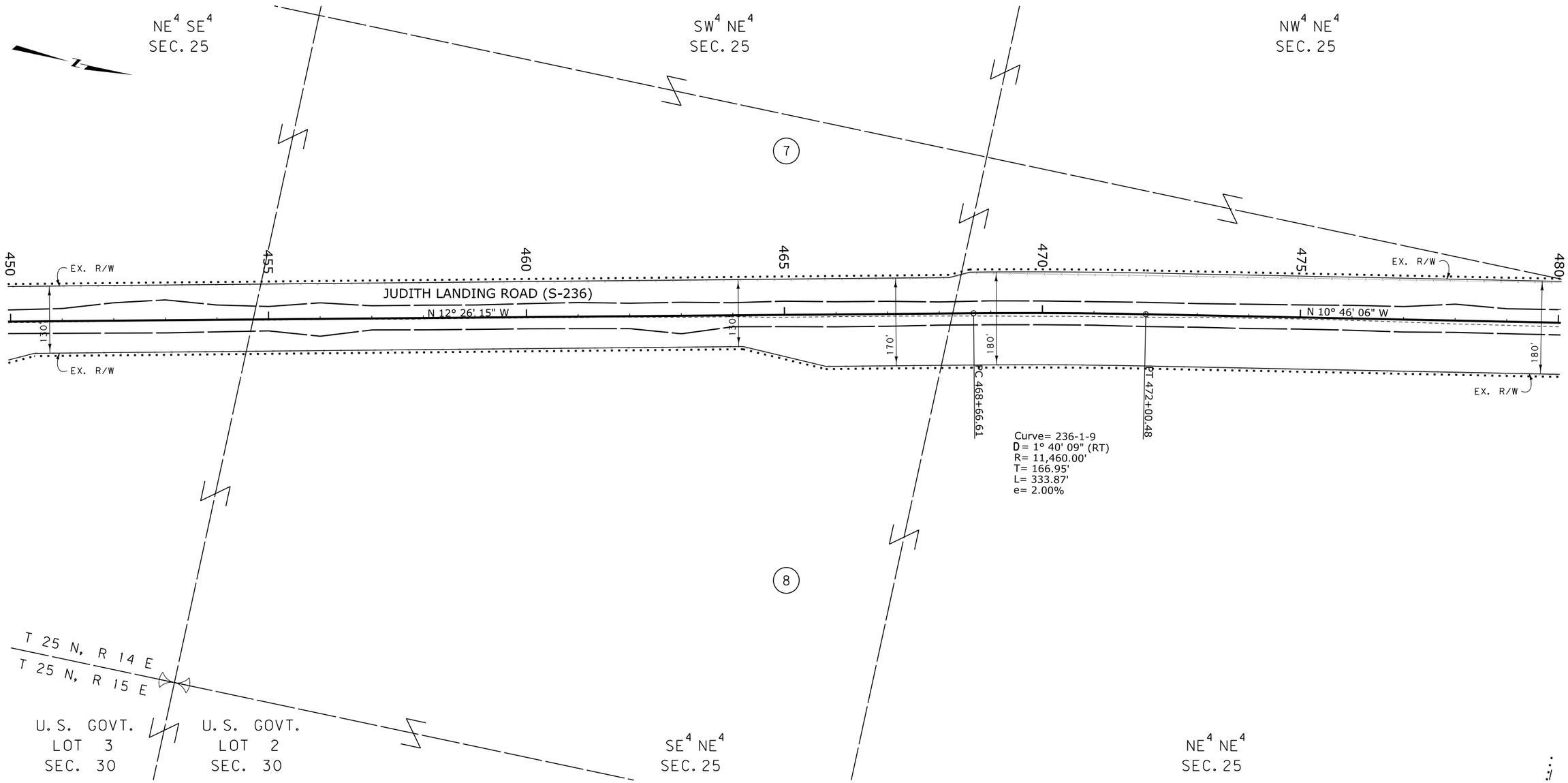

CONSTRUCTION LIMITS
CUT SECTION — TOP OF CUT
TRANSITION
TOE OF FILL
BACKSLOPE LIMITS INCLUDE ROUNDING

MAP REVISED

FHWA/MDT APPROVAL
1-13-16

3
2
1

MDT MONTANA DEPARTMENT OF TRANSPORTATION

c:\dgn\9137000ropln002.dgn
5/26/2016
11:29:44 AM CPS-U1068

NOTES:
1. THE PROPOSED R/W LINE WHERE A SPIRAL CURVE TRANSITION IS USED IS A CHORD RATHER THAN A CONCENTRIC CURVE.
2. ALL STATIONS AND OFFSETS FOR R/W BREAKS ARE IN REFERENCE TO THE R/W BASELINE.

MONTANA DEPARTMENT OF TRANSPORTATION

RIGHT OF WAY PLAN

CHOUTEAU COUNTY

SCALE 1" = 100'

0 50' 100' 200' 300'

STATE	RIGHT OF WAY	SHEET NO.	TOTAL SHEETS
MONTANA		9	24
R/W ID.		MT DOT 236(1)	
PROJECT NO.		9137-016-000	

MT 236 SOUTH OF BIG SANDY

SEE SHEET NO. 2 FOR OWNERSHIP NAMES, ADDRESSES, AREAS, ETC.

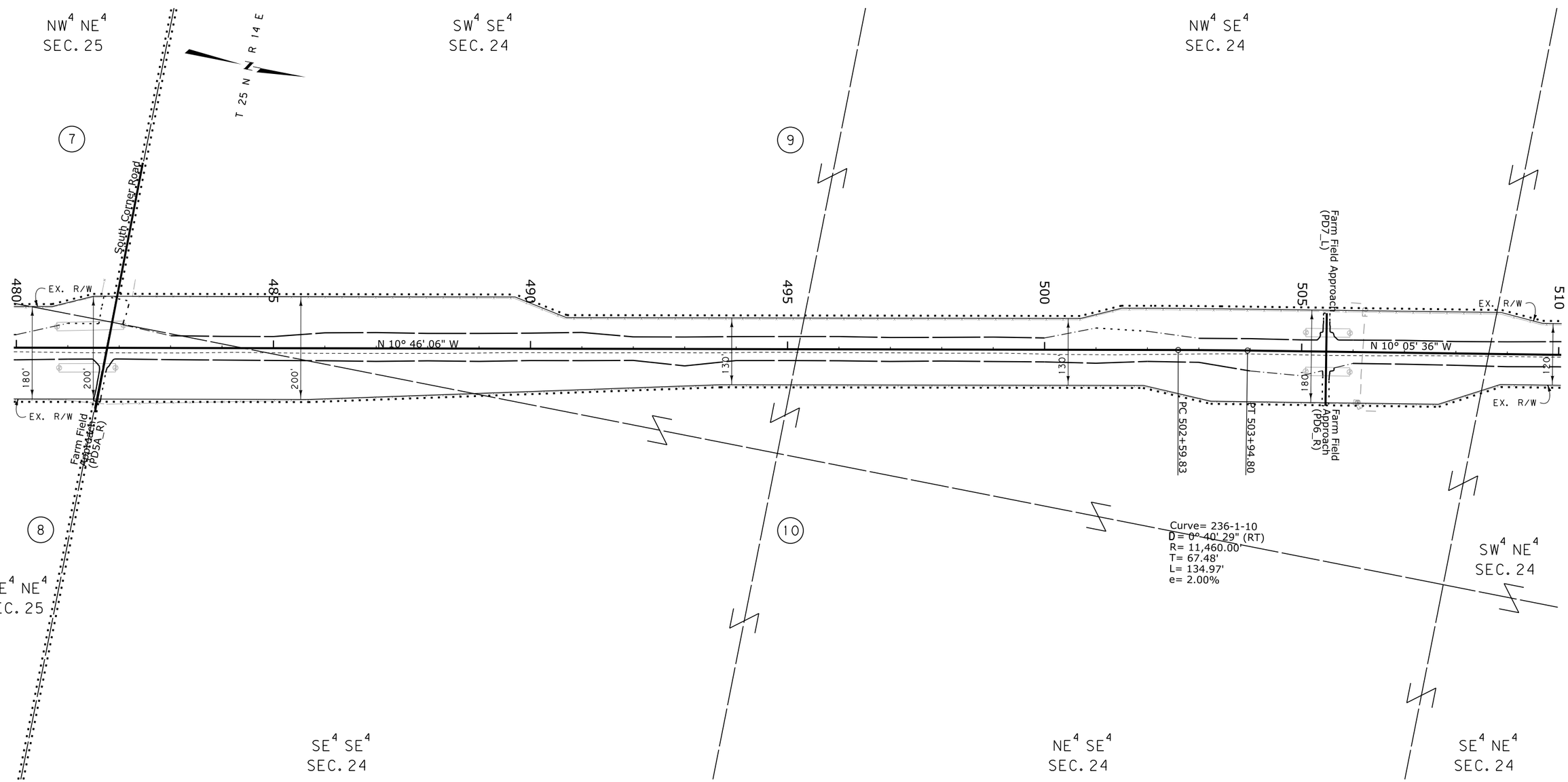

CONSTRUCTION LIMITS	MAP REVISED
CUT SECTION (TOP OF CUT)	
TRANSITION	
TOE OF FILL	
BACKSLOPE LIMITS INCLUDE ROUNDING	FHWA/MDT APPROVAL 1-13-16

3	MDT MONTANA DEPARTMENT OF TRANSPORTATION	c:\dgn\9137000ropln003.dgn
2		5/26/2016
1		11:29:55 AM CPS-U1068

NOTES:
1. THE PROPOSED R/W LINE WHERE A SPIRAL CURVE TRANSITION IS USED IS A CHORD RATHER THAN A CONCENTRIC CURVE.
2. ALL STATIONS AND OFFSETS FOR R/W BREAKS ARE IN REFERENCE TO THE R/W BASELINE.

MONTANA DEPARTMENT OF TRANSPORTATION

RIGHT OF WAY PLAN

CHOUTEAU COUNTY

SCALE 1" = 100'

0 50' 100' 200' 300'

STATE	RIGHT OF WAY	SHEET NO.	TOTAL SHEETS
MONTANA		10	24
R/W ID.		MT DOT 236(1)	
PROJECT NO.		9137-016-000	

MT 236 SOUTH OF BIG SANDY

SEE SHEET NO. 2 FOR OWNERSHIP NAMES, ADDRESSES, AREAS, ETC.

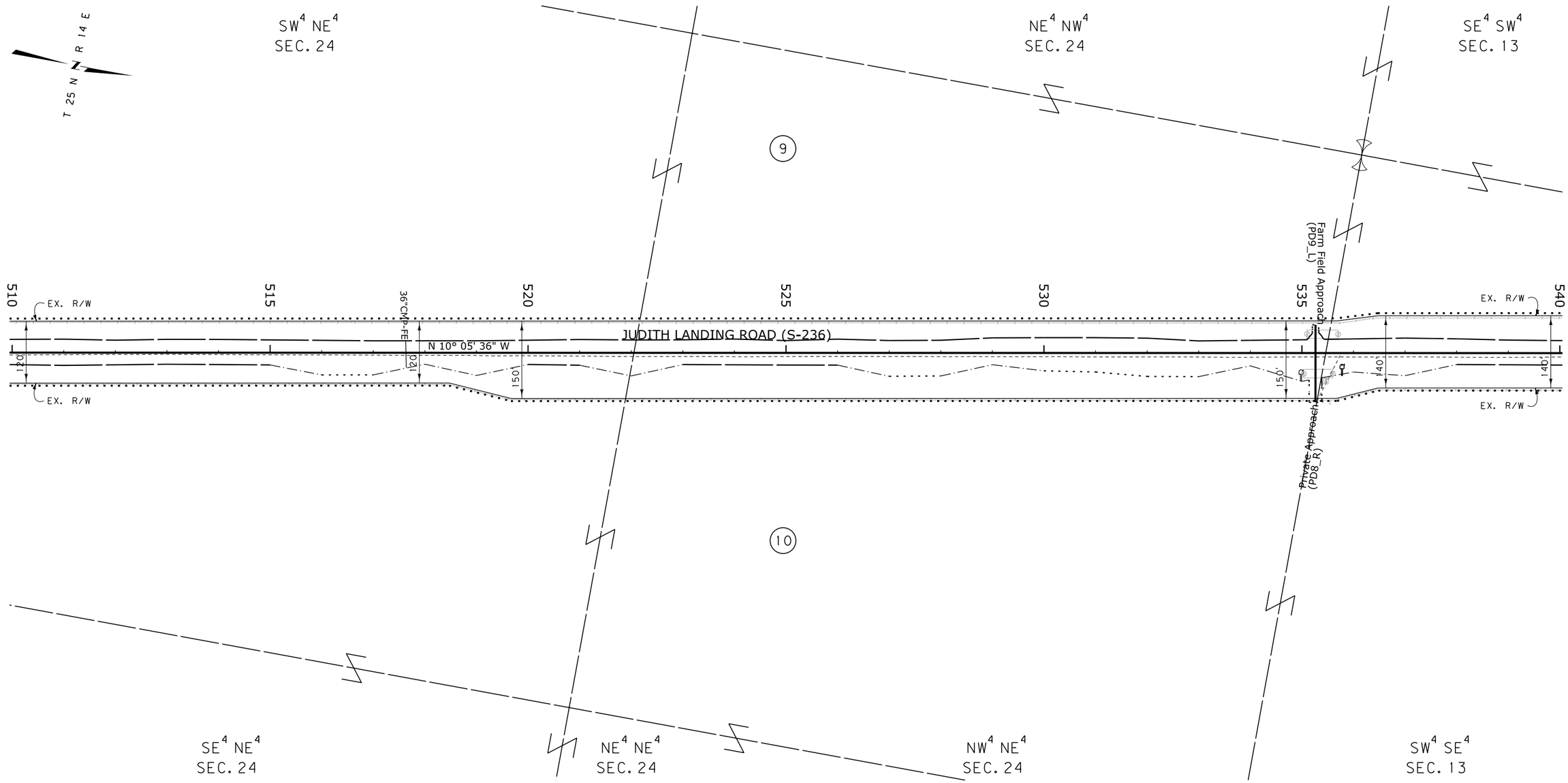

CONSTRUCTION LIMITS	MAP REVISED
CUT SECTION (TOP OF CUT)	
TRANSITION	
TOE OF FILL	
BACKSLOPE LIMITS INCLUDE ROUNDING	FHWA/MDT APPROVAL 1-13-16

3	MDT MONTANA DEPARTMENT OF TRANSPORTATION	c:\dgn\9137000ropln003.dgn	
2		5/26/2016	
1		11:29:58 AM	CPS - U1068

NOTES:
1. THE PROPOSED R/W LINE WHERE A SPIRAL CURVE TRANSITION IS USED IS A CHORD RATHER THAN A CONCENTRIC CURVE.
2. ALL STATIONS AND OFFSETS FOR R/W BREAKS ARE IN REFERENCE TO THE R/W BASELINE.

MONTANA DEPARTMENT OF TRANSPORTATION

RIGHT OF WAY PLAN

CHOUTEAU COUNTY

SCALE 1" = 100'

0 50' 100' 200' 300'

STATE	RIGHT OF WAY	SHEET NO.	TOTAL SHEETS
MONTANA		11	24
R/W ID.	MT DOT 236(1)		
PROJECT NO.	9137-016-000		

MT 236 SOUTH OF BIG SANDY

SEE SHEET NO. 2 FOR OWNERSHIP NAMES, ADDRESSES, AREAS, ETC.

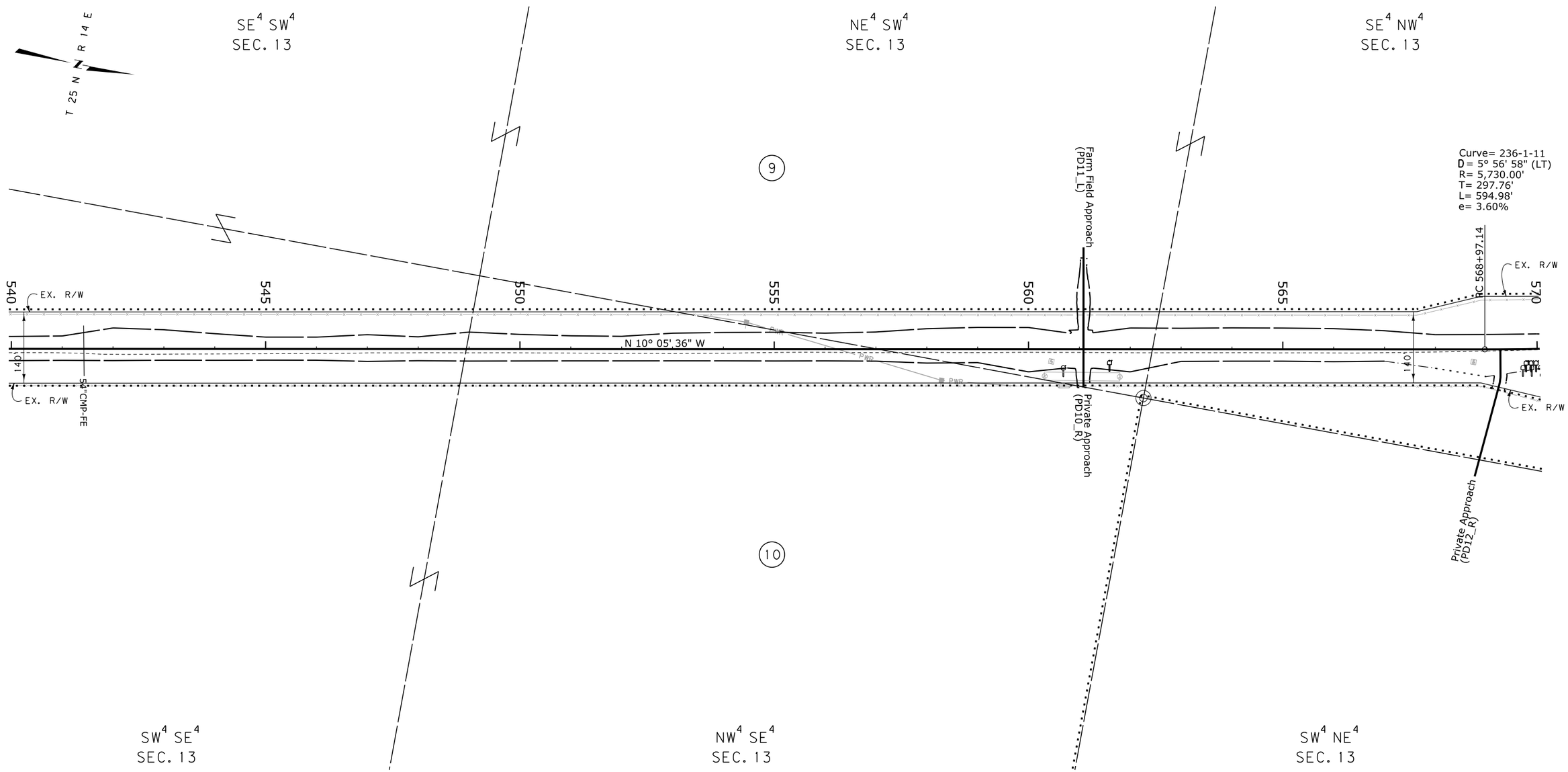

CONSTRUCTION LIMITS	MAP REVISED
CUT SECTION (TOP OF CUT)	
TRANSITION	
TOE OF FILL	
BACKSLOPE LIMITS INCLUDE ROUNDING	FHWA/MDT APPROVAL 1-13-16

3	MDT MONTANA DEPARTMENT OF TRANSPORTATION	c:\dgn\9137000ropln003.dgn	
2		5/26/2016	
1		11:30:02 AM	CPS - U1068

NOTES:
1. THE PROPOSED R/W LINE WHERE A SPIRAL CURVE TRANSITION IS USED IS A CHORD RATHER THAN A CONCENTRIC CURVE.
2. ALL STATIONS AND OFFSETS FOR R/W BREAKS ARE IN REFERENCE TO THE R/W BASELINE.

MONTANA DEPARTMENT OF TRANSPORTATION

RIGHT OF WAY PLAN

CHOUTEAU COUNTY

SCALE 1" = 100'

0 50' 100' 200' 300'

STATE	RIGHT OF WAY	SHEET NO.	TOTAL SHEETS
MONTANA		12	24
R/W ID.		MT DOT 236(1)	
PROJECT NO.		9137-016-000	

MT 236 SOUTH OF BIG SANDY

SEE SHEET NO. 2 FOR OWNERSHIP NAMES, ADDRESSES, AREAS, ETC.

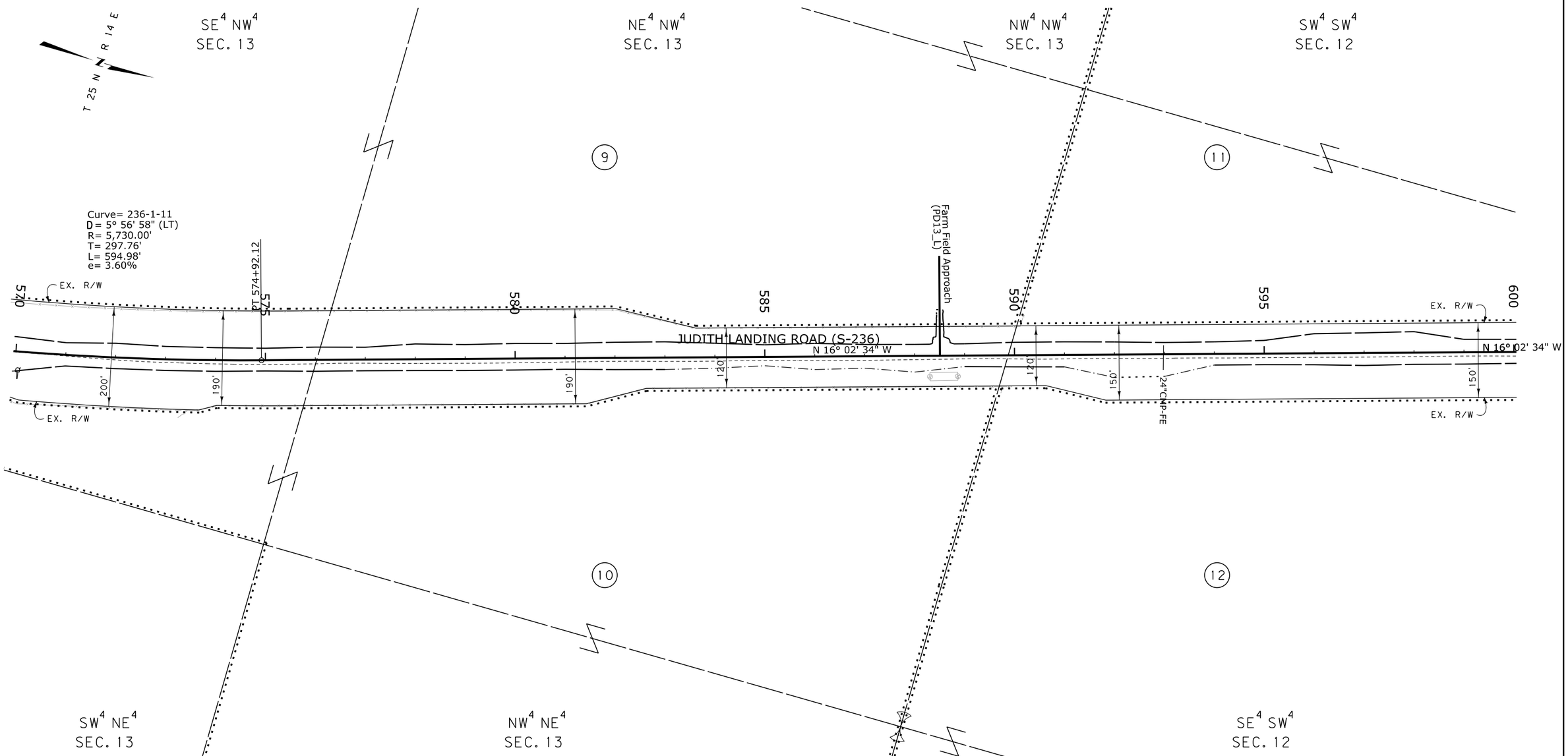

CONSTRUCTION LIMITS	MAP REVISED
CUT SECTION (TOP OF CUT)	
TRANSITION	
TOE OF FILL	
BACKSLOPE LIMITS INCLUDE ROUNDING	FHWA/MDT APPROVAL 1-13-16

3	MDT MONTANA DEPARTMENT OF TRANSPORTATION	c:\dgn\9137000ropln004.dgn	
2		5/26/2016	
1		11:30:12 AM	CPS - U1068

NOTES:
1. THE PROPOSED R/W LINE WHERE A SPIRAL CURVE TRANSITION IS USED IS A CHORD RATHER THAN A CONCENTRIC CURVE.
2. ALL STATIONS AND OFFSETS FOR R/W BREAKS ARE IN REFERENCE TO THE R/W BASELINE.

MONTANA DEPARTMENT OF TRANSPORTATION

RIGHT OF WAY PLAN

CHOUTEAU COUNTY

SCALE 1" = 100'

0 50' 100' 200' 300'

STATE	RIGHT OF WAY	SHEET NO.	TOTAL SHEETS
MONTANA		13	24
R/W ID.		MT DOT 236(1)	
PROJECT NO.		9137-016-000	

MT 236 SOUTH OF BIG SANDY

SEE SHEET NO. 2 FOR OWNERSHIP NAMES, ADDRESSES, AREAS, ETC.

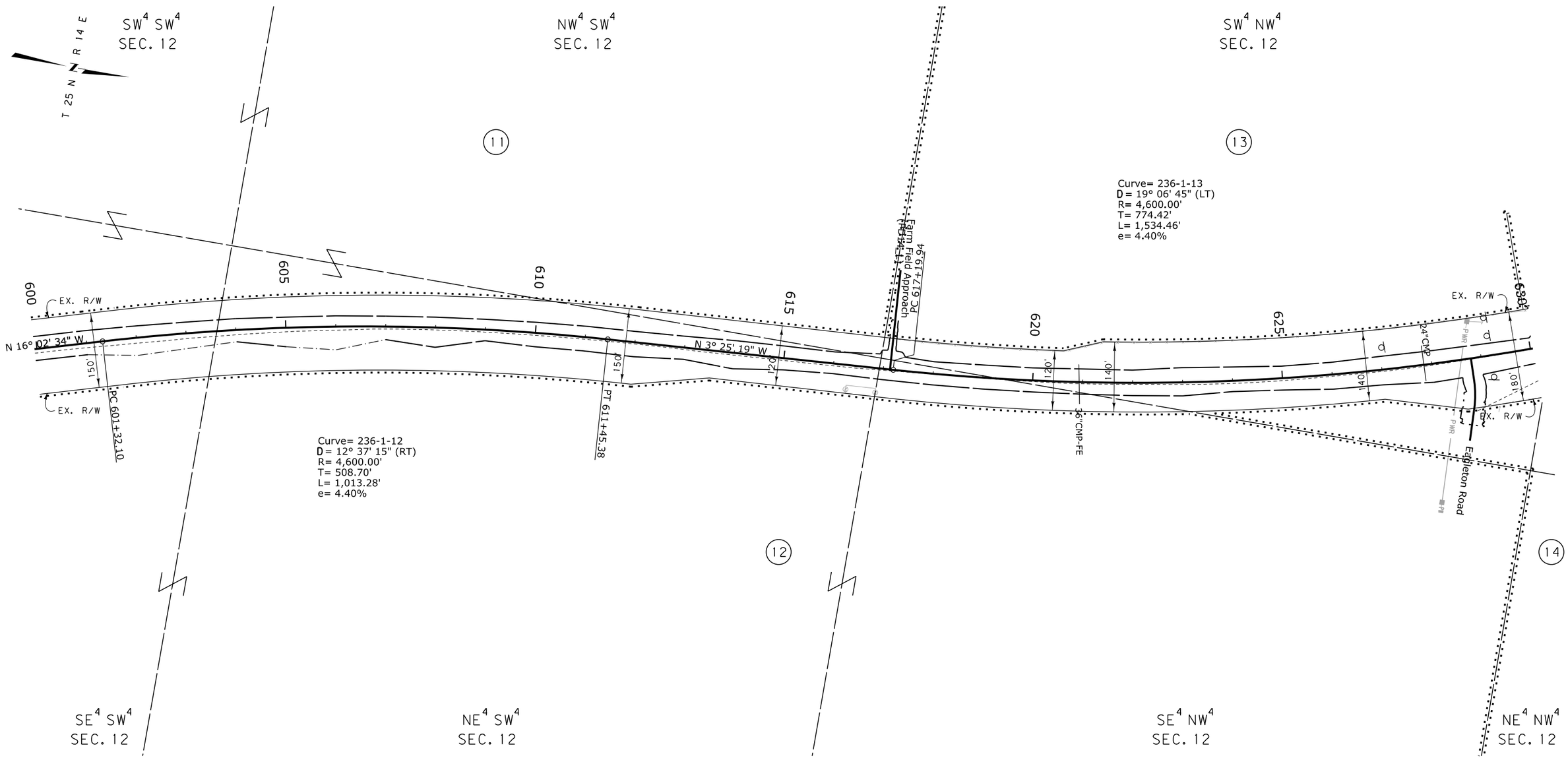

CONSTRUCTION LIMITS	MAP REVISED
CUT SECTION (TOP OF CUT)	
TRANSITION	
TOE OF FILL	
BACKSLOPE LIMITS INCLUDE ROUNDING	FHWA/MDT APPROVAL 1-13-16

3	MDT MONTANA DEPARTMENT OF TRANSPORTATION	c:\dgn\9137000ropln004.dgn
2		5/26/2016
1		11:30:16 AM CPS - U1068

NOTES:
1. THE PROPOSED R/W LINE WHERE A SPIRAL CURVE TRANSITION IS USED IS A CHORD RATHER THAN A CONCENTRIC CURVE.
2. ALL STATIONS AND OFFSETS FOR R/W BREAKS ARE IN REFERENCE TO THE R/W BASELINE.

MONTANA DEPARTMENT OF TRANSPORTATION

RIGHT OF WAY PLAN

CHOUTEAU COUNTY

SCALE 1" = 100'

0 50' 100' 200' 300'

STATE	RIGHT OF WAY	SHEET NO.	TOTAL SHEETS
MONTANA		14	24
R/W ID.		MT DOT 236(1)	
PROJECT NO.		9137-016-000	

MT 236 SOUTH OF BIG SANDY

SEE SHEET NO. 2 FOR OWNERSHIP NAMES, ADDRESSES, AREAS, ETC.

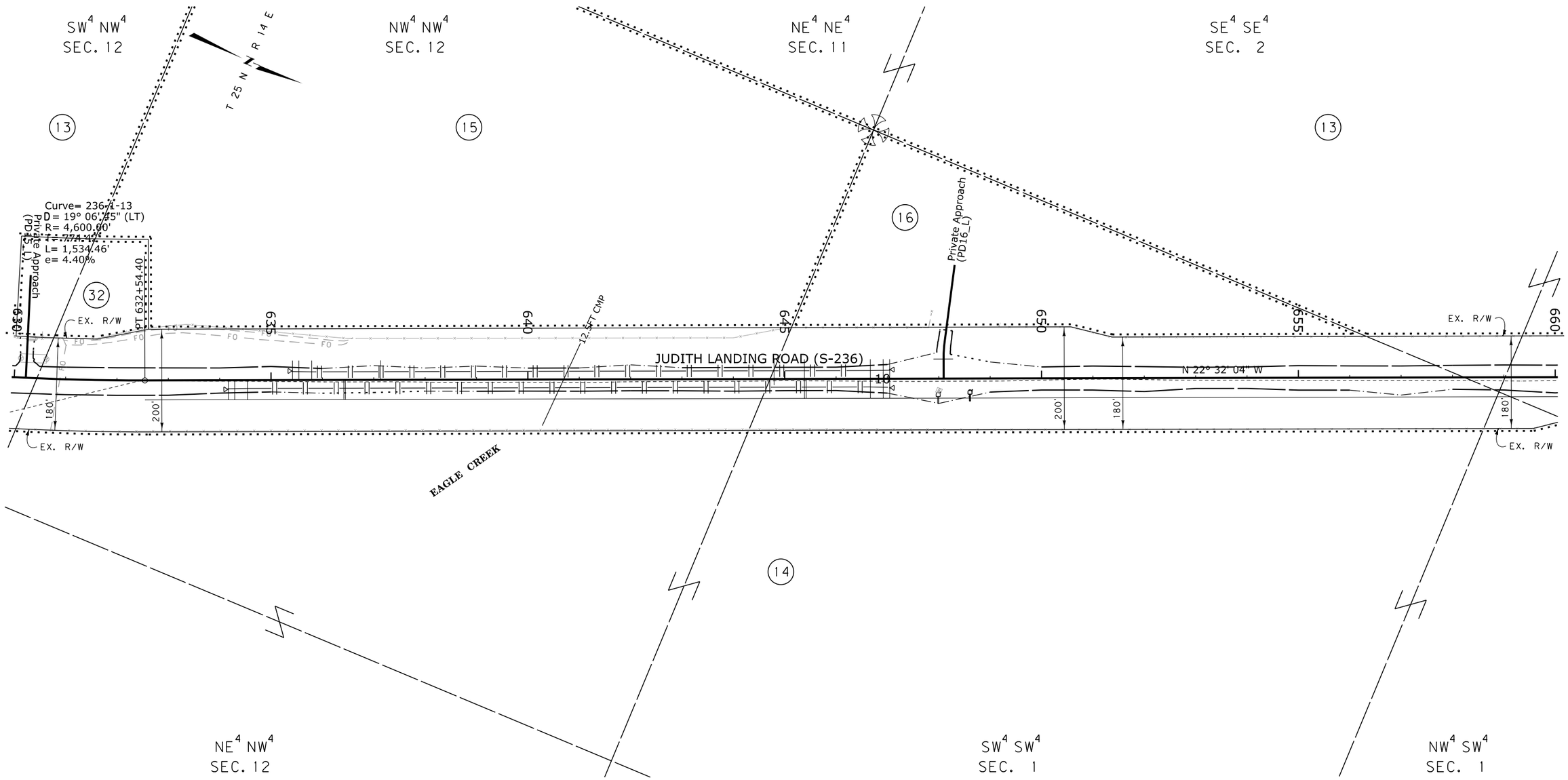

CONSTRUCTION LIMITS	MAP REVISED
CUT SECTION (TOP OF CUT)	
TRANSITION	
TOE OF FILL	
BACKSLOPE LIMITS INCLUDE ROUNDING	FHWA/MDT APPROVAL 1-13-16

3	MDT MONTANA DEPARTMENT OF TRANSPORTATION	c:\dgn\9137000ropln004.dgn
2		5/26/2016
1		11:30:19 AM CPS-U1068

NOTES:
1. THE PROPOSED R/W LINE WHERE A SPIRAL CURVE TRANSITION IS USED IS A CHORD RATHER THAN A CONCENTRIC CURVE.
2. ALL STATIONS AND OFFSETS FOR R/W BREAKS ARE IN REFERENCE TO THE R/W BASELINE.

MONTANA DEPARTMENT OF TRANSPORTATION

RIGHT OF WAY PLAN

CHOUTEAU COUNTY

SCALE 1" = 100'

0 50' 100' 200' 300'

STATE	RIGHT OF WAY	SHEET NO.	TOTAL SHEETS
MONTANA		15	24
R/W ID.		MT DOT 236(1)	
PROJECT NO.		9137-016-000	

MT 236 SOUTH OF BIG SANDY

SEE SHEET NO. 2 FOR OWNERSHIP NAMES, ADDRESSES, AREAS, ETC.

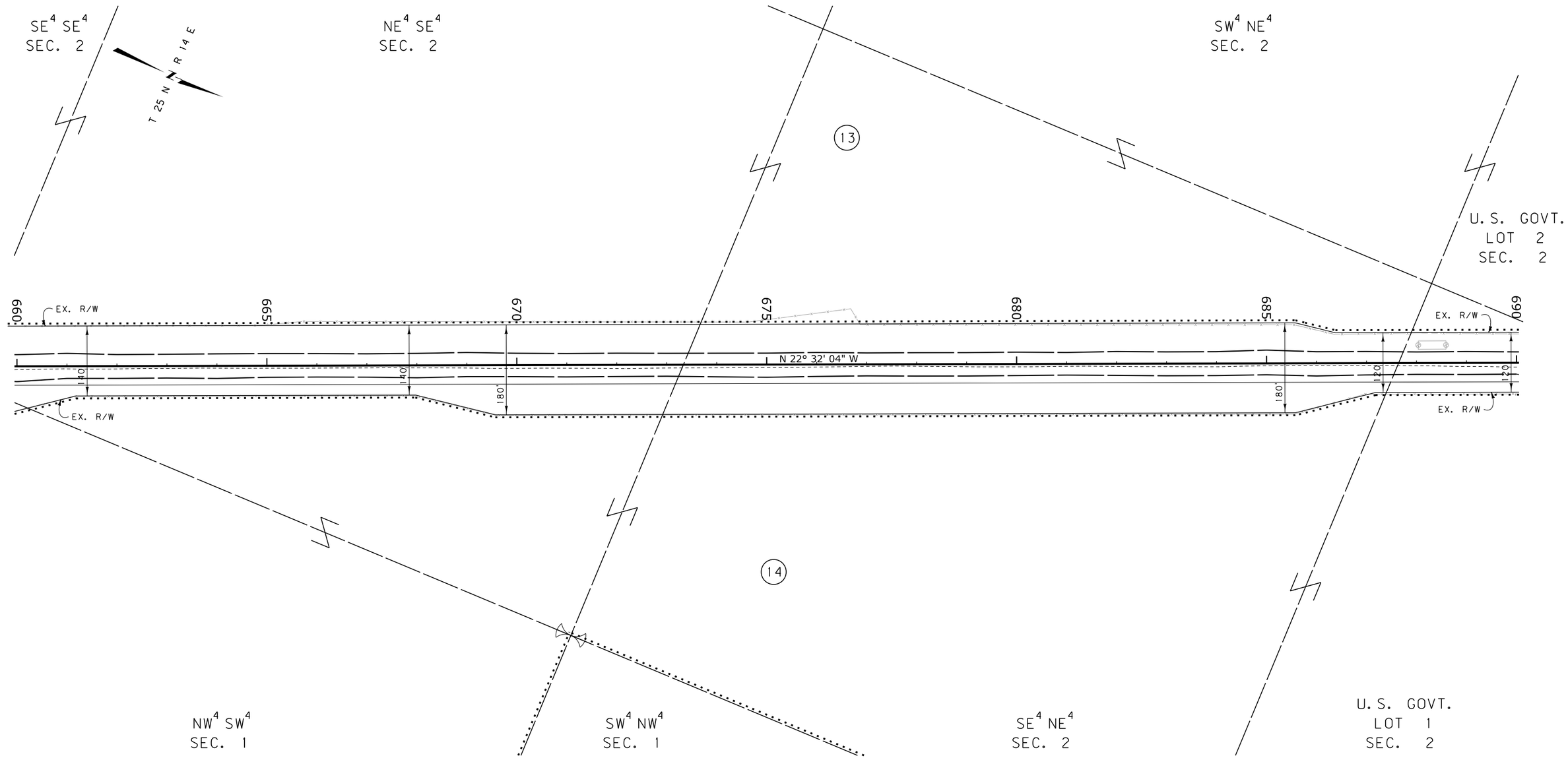

CONSTRUCTION LIMITS	MAP REVISED
CUT SECTION (TOP OF CUT)	
TRANSITION	
TOE OF FILL	
BACKSLOPE LIMITS INCLUDE ROUNDING	FHWA/MDT APPROVAL 1-13-16

3
2
1

MDT MONTANA DEPARTMENT OF TRANSPORTATION

c:\dgn\9137000ropln005.dgn
5/26/2016
11:30:29 AM CPS-U1068

NOTES:
1. THE PROPOSED R/W LINE WHERE A SPIRAL CURVE TRANSITION IS USED IS A CHORD RATHER THAN A CONCENTRIC CURVE.
2. ALL STATIONS AND OFFSETS FOR R/W BREAKS ARE IN REFERENCE TO THE R/W BASELINE.

MONTANA DEPARTMENT OF TRANSPORTATION

RIGHT OF WAY PLAN

CHOUTEAU COUNTY

SCALE 1" = 100'

0 50' 100' 200' 300'

STATE	RIGHT OF WAY	SHEET NO.	TOTAL SHEETS
MONTANA		16	24
R/W ID.		MT DOT 236(1)	
PROJECT NO.		9137-016-000	

MT 236 SOUTH OF BIG SANDY

SEE SHEET NO. 2 FOR OWNERSHIP NAMES, ADDRESSES, AREAS, ETC.

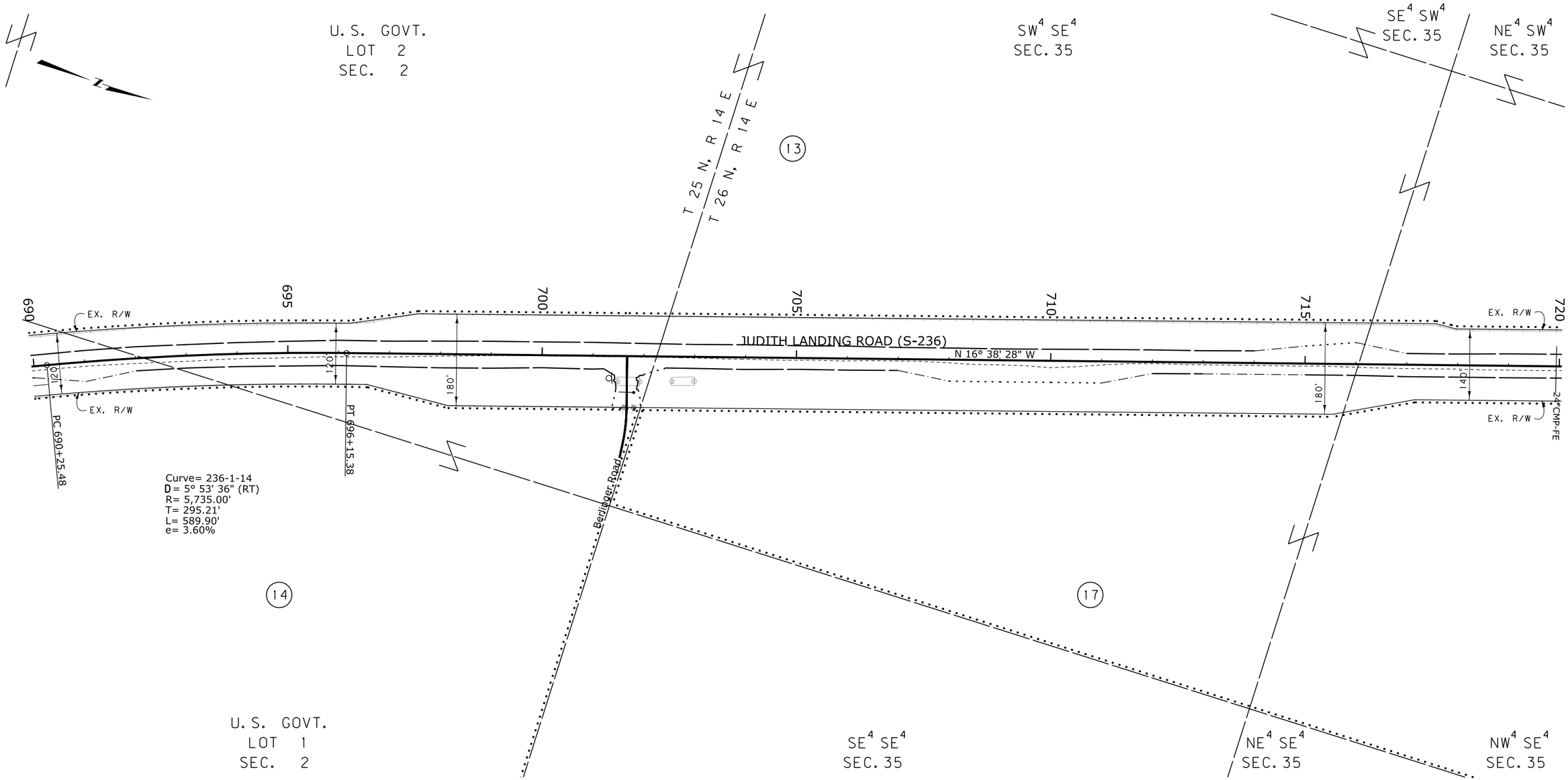

CONSTRUCTION LIMITS	MAP REVISED
CUT SECTION (TOP OF CUT)	
TRANSITION	
TOE OF FILL	
BACKSLOPE LIMITS INCLUDE ROUNDING	FHWA/MDT APPROVAL 1-13-16

3	MDT MONTANA DEPARTMENT OF TRANSPORTATION	c:\dgn\9137000ropln005.dgn
2		5/26/2016
1		11:30:33 AM CPS - U1068

NOTES:
1. THE PROPOSED R/W LINE WHERE A SPIRAL CURVE TRANSITION IS USED IS A CHORD RATHER THAN A CONCENTRIC CURVE.
2. ALL STATIONS AND OFFSETS FOR R/W BREAKS ARE IN REFERENCE TO THE R/W BASELINE.

MONTANA DEPARTMENT OF TRANSPORTATION

RIGHT OF WAY PLAN

CHOUTEAU COUNTY

SCALE 1" = 100'

0 50' 100' 200' 300'

STATE	RIGHT OF WAY	SHEET NO.	TOTAL SHEETS
MONTANA		17	24
R/W ID.		MT DOT 236(1)	
PROJECT NO.		9137-016-000	

MT 236 SOUTH OF BIG SANDY

SEE SHEET NO. 2 FOR OWNERSHIP NAMES, ADDRESSES, AREAS, ETC.

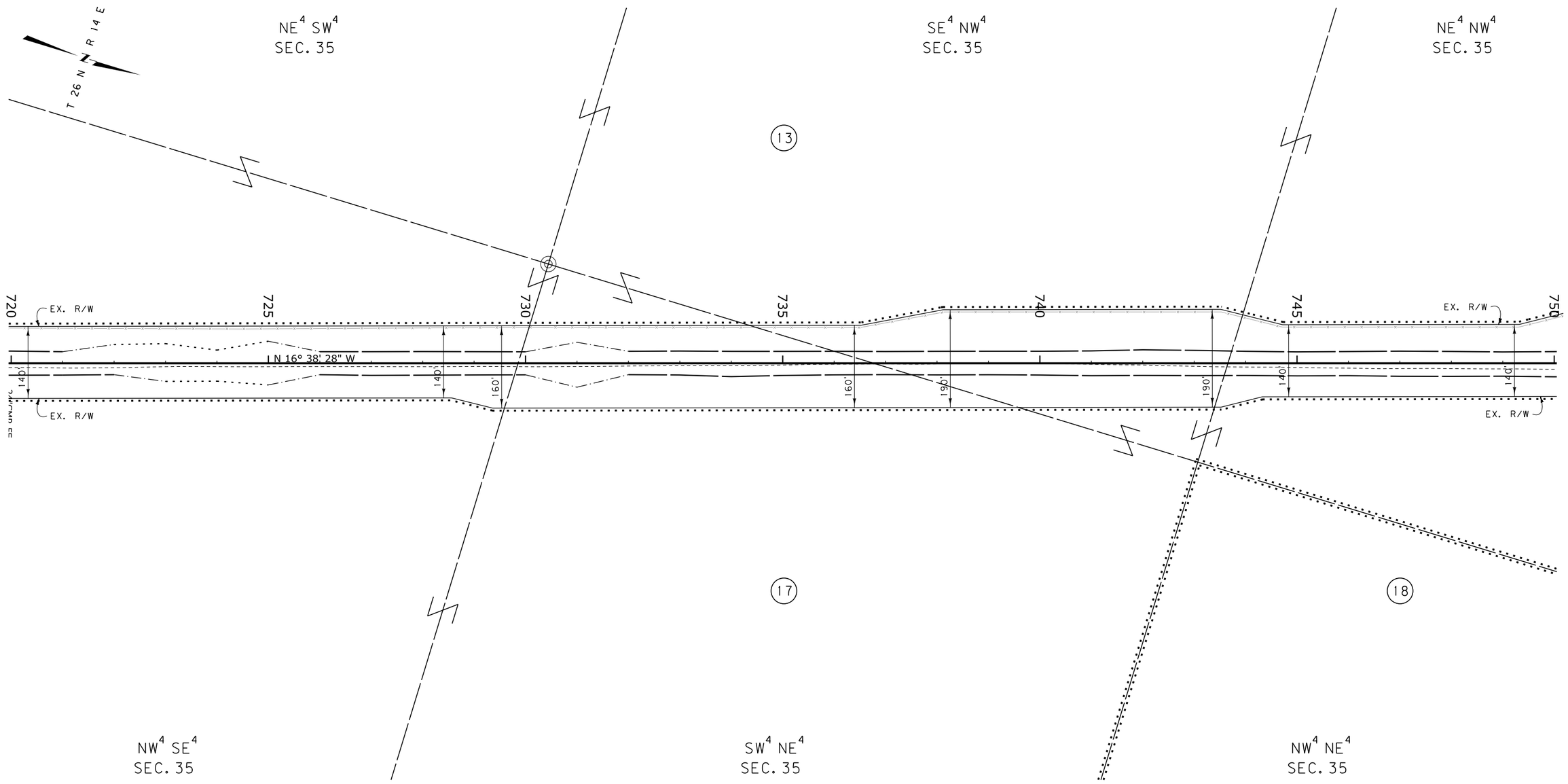

CONSTRUCTION LIMITS	MAP REVISED
CUT SECTION (TOP OF CUT)	
TRANSITION	
TOE OF FILL	
BACKSLOPE LIMITS INCLUDE ROUNDING	FHWA/MDT APPROVAL 1-13-16

3	MDT MONTANA DEPARTMENT OF TRANSPORTATION	c:\dgn\9137000ropln005.dgn
2		5/26/2016
1		11:30:36 AM CPS-U1068

NOTES:
1. THE PROPOSED R/W LINE WHERE A SPIRAL CURVE TRANSITION IS USED IS A CHORD RATHER THAN A CONCENTRIC CURVE.
2. ALL STATIONS AND OFFSETS FOR R/W BREAKS ARE IN REFERENCE TO THE R/W BASELINE.

MONTANA DEPARTMENT OF TRANSPORTATION

RIGHT OF WAY PLAN

CHOUTEAU COUNTY

SCALE 1" = 100'

0 50' 100' 200' 300'

STATE	RIGHT OF WAY	SHEET NO.	TOTAL SHEETS
MONTANA		18	24
R/W ID.		MT DOT 236(1)	
PROJECT NO.		9137-016-000	

MT 236 SOUTH OF BIG SANDY

SEE SHEET NO. 2 FOR OWNERSHIP NAMES, ADDRESSES, AREAS, ETC.

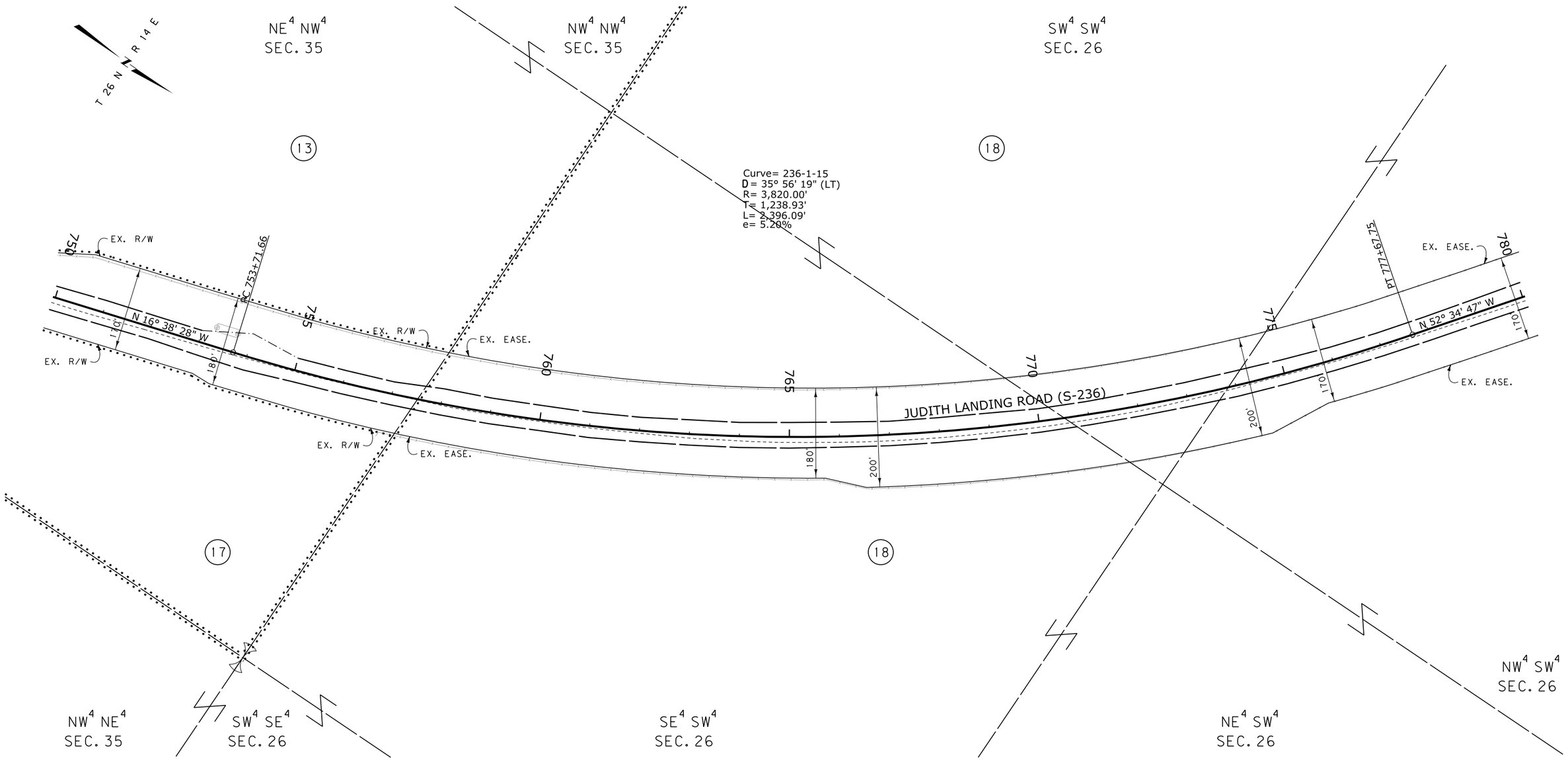

CONSTRUCTION LIMITS	MAP REVISED
CUT SECTION — TOP OF CUT	
TRANSITION	
TOE OF FILL	
BACKSLOPE LIMITS INCLUDE ROUNDING	FHWA/MDT APPROVAL 1-13-16

3	MDT MONTANA DEPARTMENT OF TRANSPORTATION	c:\dgn\9137000ropln006.dgn
2		5/26/2016
1		11:30:47 AM CPS-U1068

NOTES:
1. THE PROPOSED R/W LINE WHERE A SPIRAL CURVE TRANSITION IS USED IS A CHORD RATHER THAN A CONCENTRIC CURVE.
2. ALL STATIONS AND OFFSETS FOR R/W BREAKS ARE IN REFERENCE TO THE R/W BASELINE.

MONTANA DEPARTMENT OF TRANSPORTATION

RIGHT OF WAY PLAN

CHOUTEAU COUNTY

SCALE 1" = 100'

0 50' 100' 200' 300'

STATE	RIGHT OF WAY	SHEET NO.	TOTAL SHEETS
MONTANA		19	24
R/W ID.		MT DOT 236(1)	
PROJECT NO.		9137-016-000	

MT 236 SOUTH OF BIG SANDY

SEE SHEET NO. 2 FOR OWNERSHIP NAMES, ADDRESSES, AREAS, ETC.

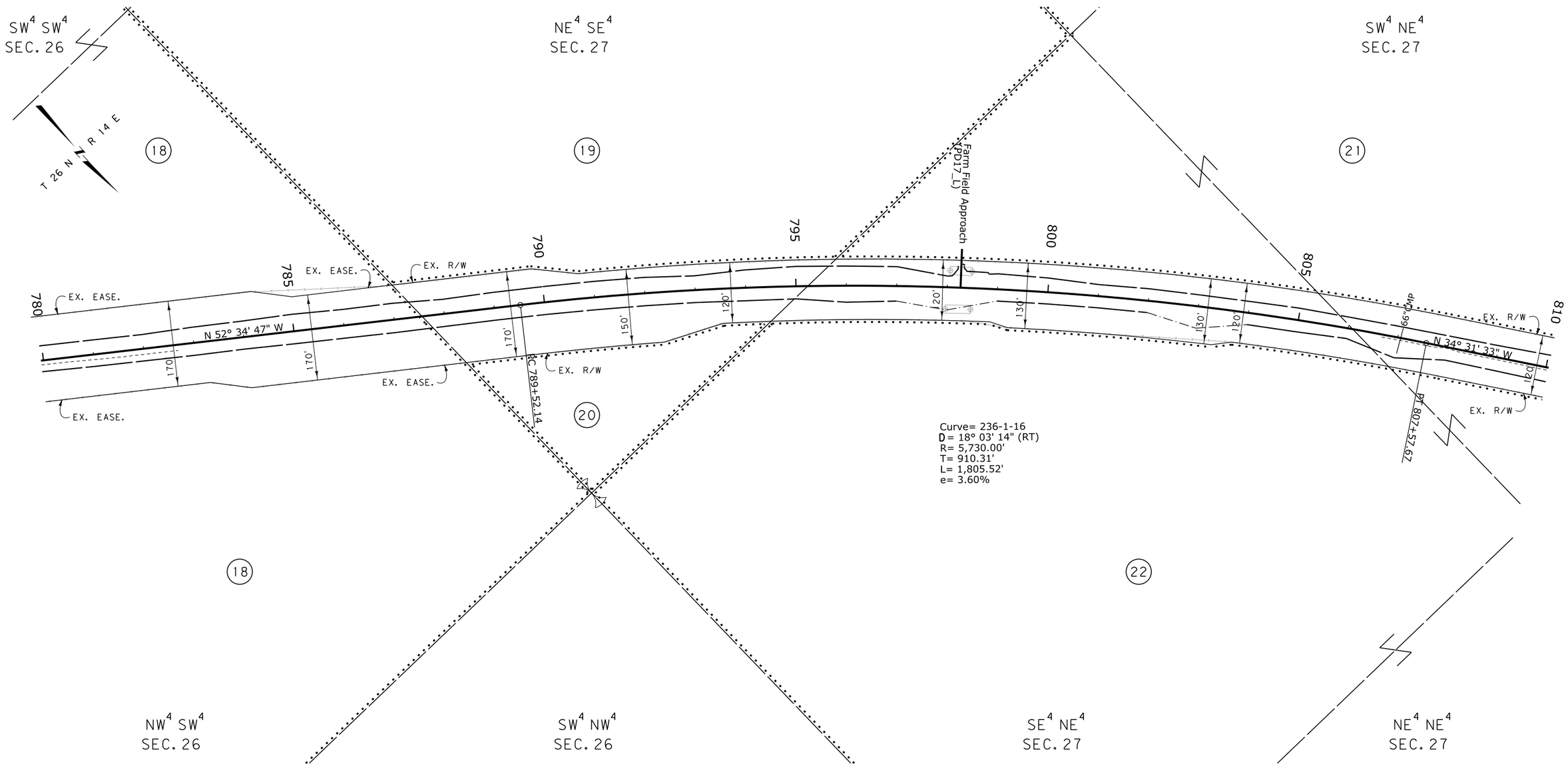

CONSTRUCTION LIMITS	MAP REVISED
CUT SECTION (TOP OF CUT)	
TRANSITION	
TOE OF FILL	
BACKSLOPE LIMITS INCLUDE ROUNDING	FHWA/MDT APPROVAL 1-13-16

3	MDT MONTANA DEPARTMENT OF TRANSPORTATION	c:\dgn\9137000ropln006.dgn
2		5/26/2016
1		11:30:50 AM CPS-U1068

NOTES:
1. THE PROPOSED R/W LINE WHERE A SPIRAL CURVE TRANSITION IS USED IS A CHORD RATHER THAN A CONCENTRIC CURVE.
2. ALL STATIONS AND OFFSETS FOR R/W BREAKS ARE IN REFERENCE TO THE R/W BASELINE.

MONTANA DEPARTMENT OF TRANSPORTATION

RIGHT OF WAY PLAN

CHOUTEAU COUNTY

SCALE 1" = 100'

0 50' 100' 200' 300'

STATE	RIGHT OF WAY	SHEET NO.	TOTAL SHEETS
MONTANA		20	24
R/W ID.		MT DOT 236(1)	
PROJECT NO.		9137-016-000	

MT 236 SOUTH OF BIG SANDY

SEE SHEET NO. 2 FOR OWNERSHIP NAMES, ADDRESSES, AREAS, ETC.

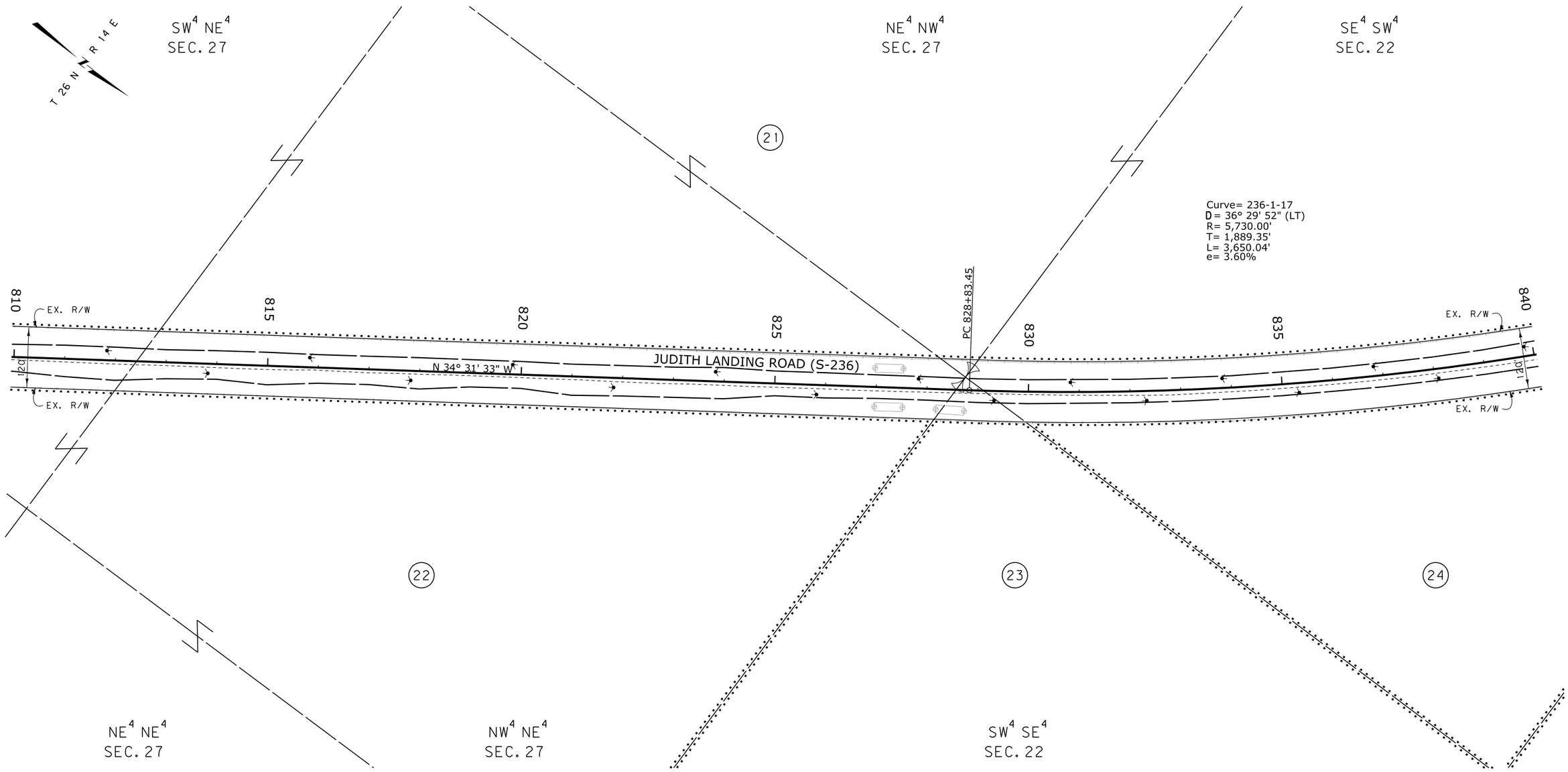

CONSTRUCTION LIMITS
CUT SECTION (TOP OF CUT)
TRANSITION
TOE OF FILL
BACKSLOPE LIMITS INCLUDE ROUNDING

MAP REVISED _____

FHWA/MDT APPROVAL
1-13-16

3	MDT MONTANA DEPARTMENT OF TRANSPORTATION	c:\dgn\9137000ropln006.dgn
2		5/26/2016
1		11:30:54 AM CPS-U1068

NOTES:
1. THE PROPOSED R/W LINE WHERE A SPIRAL CURVE TRANSITION IS USED IS A CHORD RATHER THAN A CONCENTRIC CURVE.
2. ALL STATIONS AND OFFSETS FOR R/W BREAKS ARE IN REFERENCE TO THE R/W BASELINE.

MONTANA DEPARTMENT OF TRANSPORTATION

RIGHT OF WAY PLAN

CHOUTEAU COUNTY

SCALE 1" = 100'

0 50' 100' 200' 300'

STATE	RIGHT OF WAY	SHEET NO.	TOTAL SHEETS
MONTANA		21	24
R/W ID.		MT DOT 236(1)	
PROJECT NO.		9137-016-000	

MT 236 SOUTH OF BIG SANDY

SEE SHEET NO. 2 FOR OWNERSHIP NAMES, ADDRESSES, AREAS, ETC.

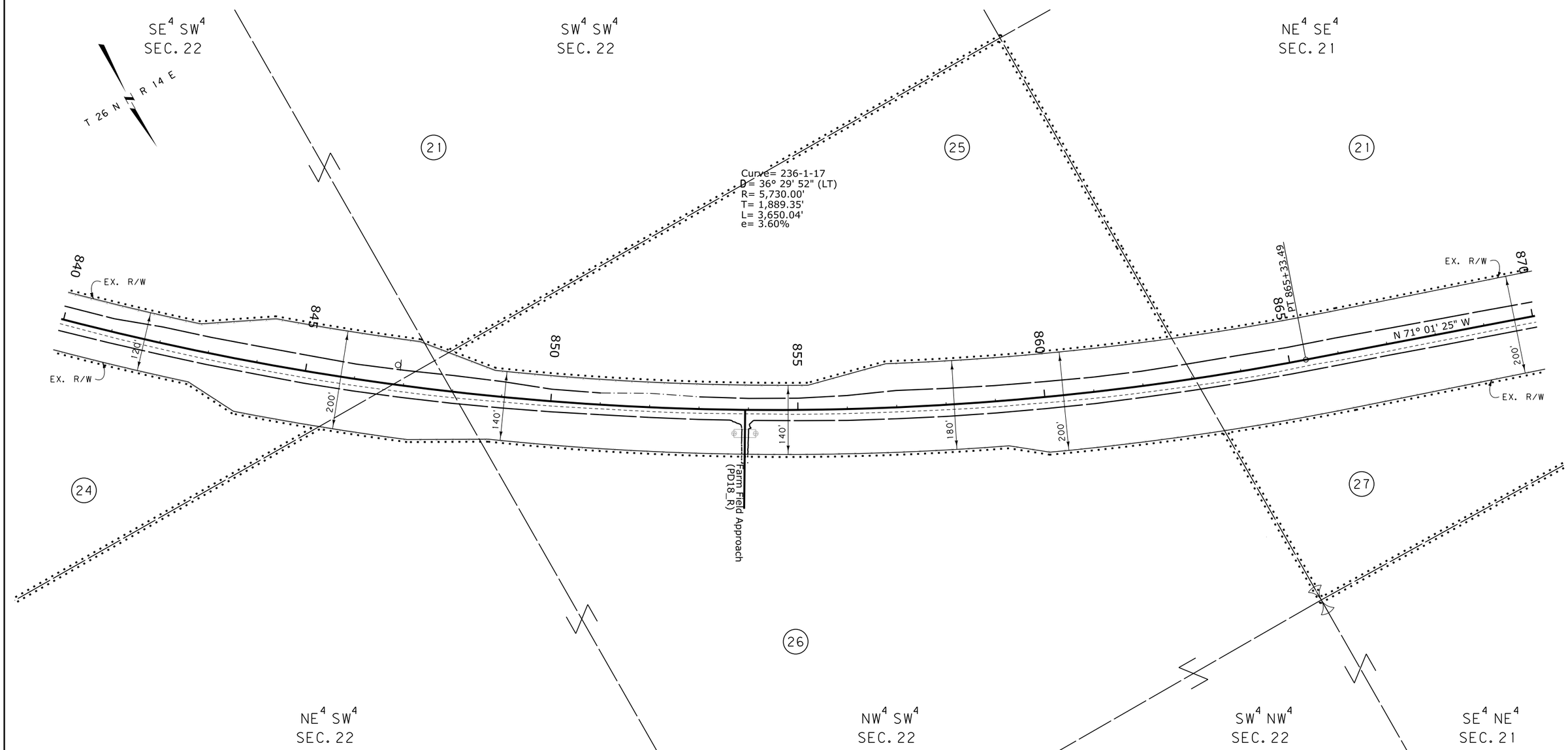

CONSTRUCTION LIMITS	MAP REVISED
CUT SECTION (TOP OF CUT)	
TRANSITION	
TOE OF FILL	
BACKSLOPE LIMITS INCLUDE ROUNDING	FHWA/MDT APPROVAL 1-13-16

3	MDT MONTANA DEPARTMENT OF TRANSPORTATION	c:\dgn\9137000ropln007.dgn
2		5/26/2016
1		11:31:04 AM CPS-U1068

NOTES:
1. THE PROPOSED R/W LINE WHERE A SPIRAL CURVE TRANSITION IS USED IS A CHORD RATHER THAN A CONCENTRIC CURVE.
2. ALL STATIONS AND OFFSETS FOR R/W BREAKS ARE IN REFERENCE TO THE R/W BASELINE.

MONTANA DEPARTMENT OF TRANSPORTATION

RIGHT OF WAY PLAN

CHOUTEAU COUNTY

SCALE 1" = 100'

0 50' 100' 200' 300'

STATE	RIGHT OF WAY	SHEET NO.	TOTAL SHEETS
MONTANA		22	24
R/W ID.		MT DOT 236(1)	
PROJECT NO.		9137-016-000	

MT 236 SOUTH OF BIG SANDY

SEE SHEET NO. 2 FOR OWNERSHIP NAMES, ADDRESSES, AREAS, ETC.

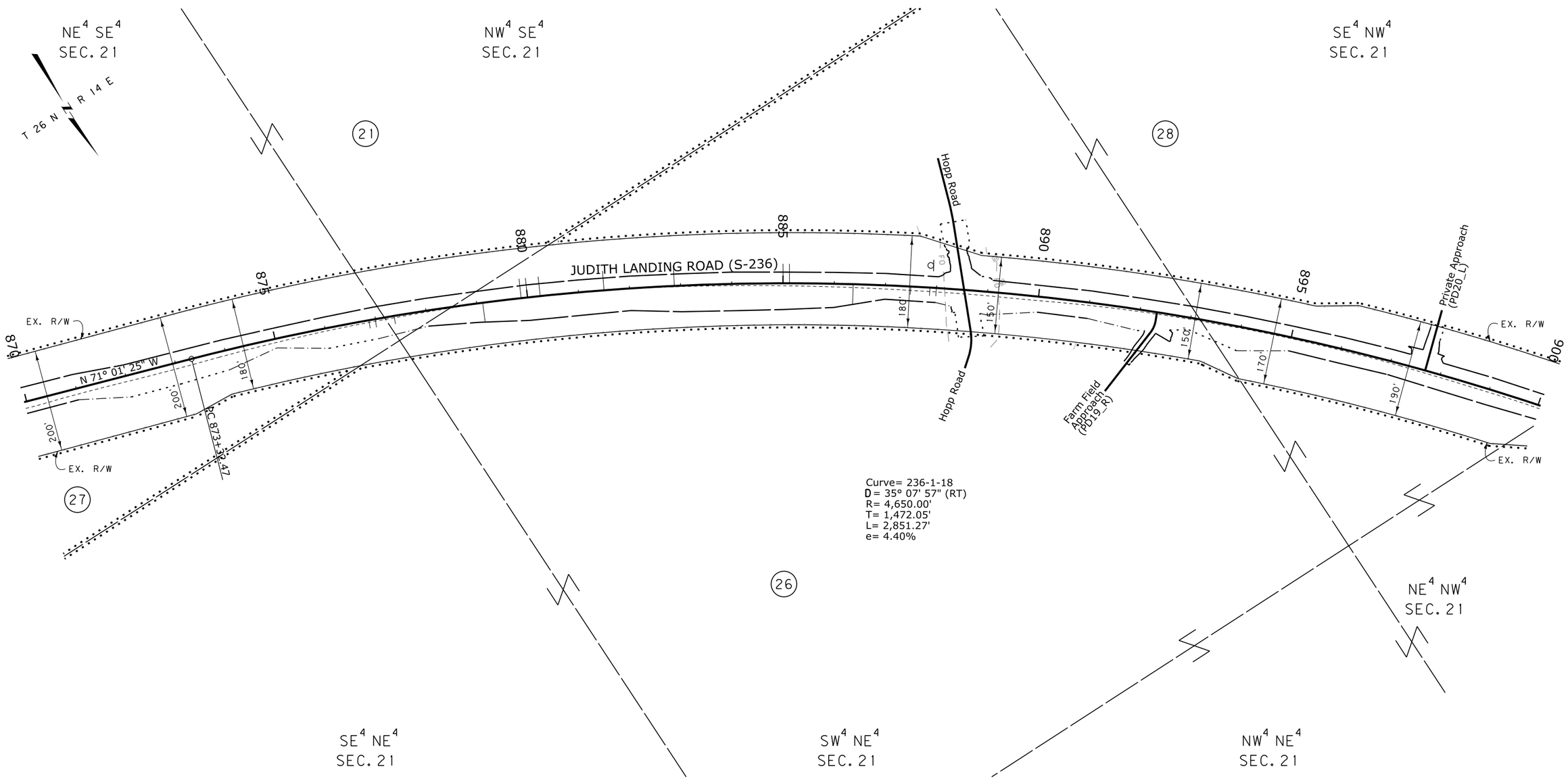

CONSTRUCTION LIMITS
CUT SECTION (TOP OF CUT)
TRANSITION
TOE OF FILL
BACKSLOPE LIMITS INCLUDE ROUNDING

MAP REVISED

FHWA/MDT APPROVAL
1-13-16

3	MDT MONTANA DEPARTMENT OF TRANSPORTATION	c:\dgn\9137000ropln007.dgn
2		5/26/2016
1		11:31:07 AM CPS-U1068

NOTES:
1. THE PROPOSED R/W LINE WHERE A SPIRAL CURVE TRANSITION IS USED IS A CHORD RATHER THAN A CONCENTRIC CURVE.
2. ALL STATIONS AND OFFSETS FOR R/W BREAKS ARE IN REFERENCE TO THE R/W BASELINE.

MONTANA DEPARTMENT OF TRANSPORTATION

RIGHT OF WAY PLAN

CHOUTEAU COUNTY

SCALE 1" = 100'

0 50' 100' 200' 300'

STATE	RIGHT OF WAY	SHEET NO.	TOTAL SHEETS
MONTANA		23	24
R/W ID.		MT DOT 236(1)	
PROJECT NO.		9137-016-000	

MT 236 SOUTH OF BIG SANDY

SEE SHEET NO. 2 FOR OWNERSHIP NAMES, ADDRESSES, AREAS, ETC.

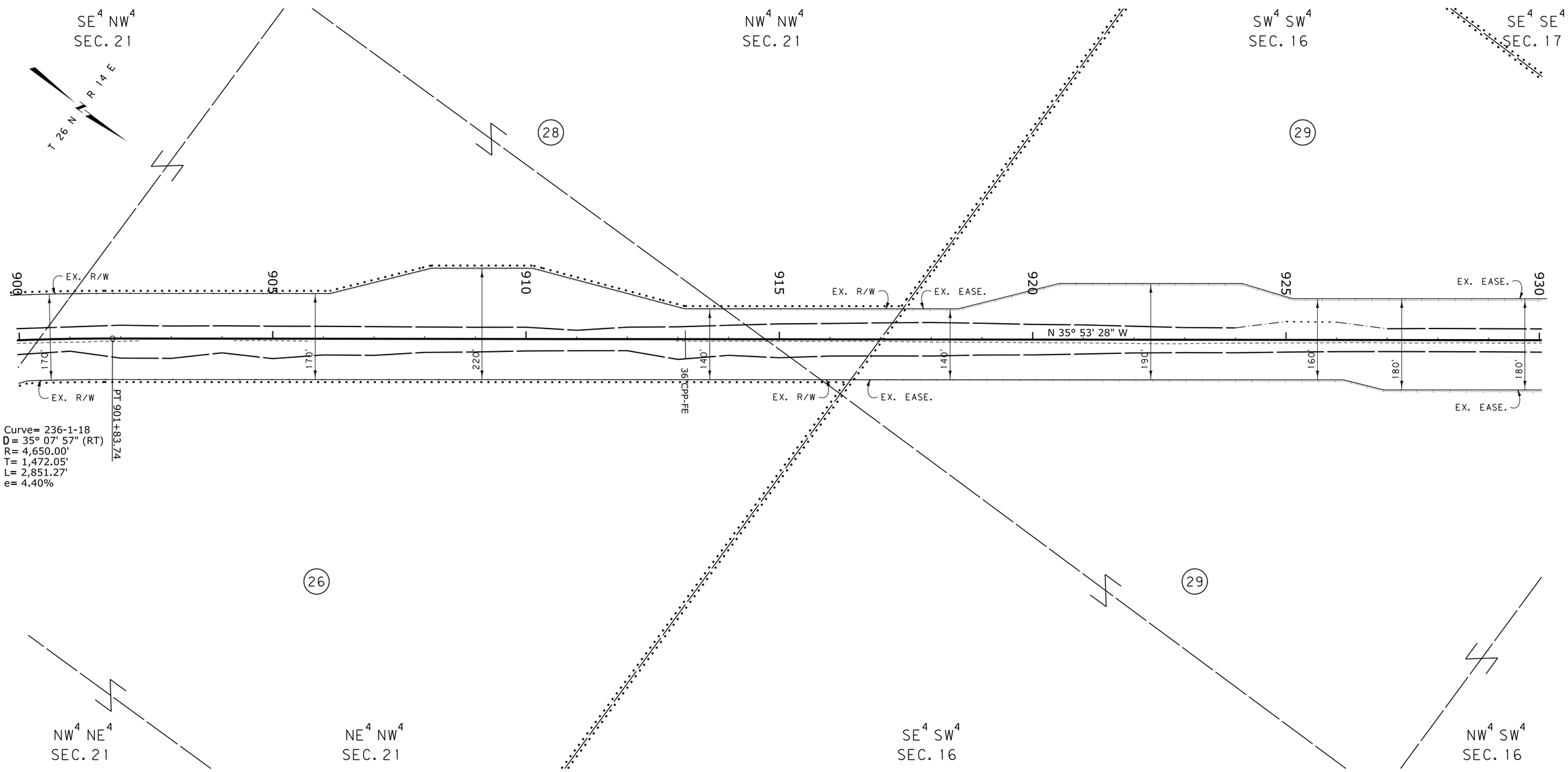

CONSTRUCTION LIMITS	MAP REVISED
CUT SECTION (TOP OF CUT)	
TRANSITION	
TOE OF FILL	
BACKSLOPE LIMITS INCLUDE ROUNDING	FHWA/MDT APPROVAL 1-13-16

3	MDT MONTANA DEPARTMENT OF TRANSPORTATION	c:\dgn\9137000ropln007.dgn
2		5/26/2016
1		11:31:11 AM CPS-U1068

NOTES:
1. THE PROPOSED R/W LINE WHERE A SPIRAL CURVE TRANSITION IS USED IS A CHORD RATHER THAN A CONCENTRIC CURVE.
2. ALL STATIONS AND OFFSETS FOR R/W BREAKS ARE IN REFERENCE TO THE R/W BASELINE.

MONTANA DEPARTMENT OF TRANSPORTATION

RIGHT OF WAY PLAN

CHOUTEAU COUNTY

SCALE 1" = 100'

0 50' 100' 200' 300'

STATE	RIGHT OF WAY	SHEET NO.	TOTAL SHEETS
MONTANA		24	24
R/W ID.		MT DOT 236(1)	
PROJECT NO.		9137-016-000	

MT 236 SOUTH OF BIG SANDY

SEE SHEET NO. 2 FOR OWNERSHIP NAMES, ADDRESSES, AREAS, ETC.

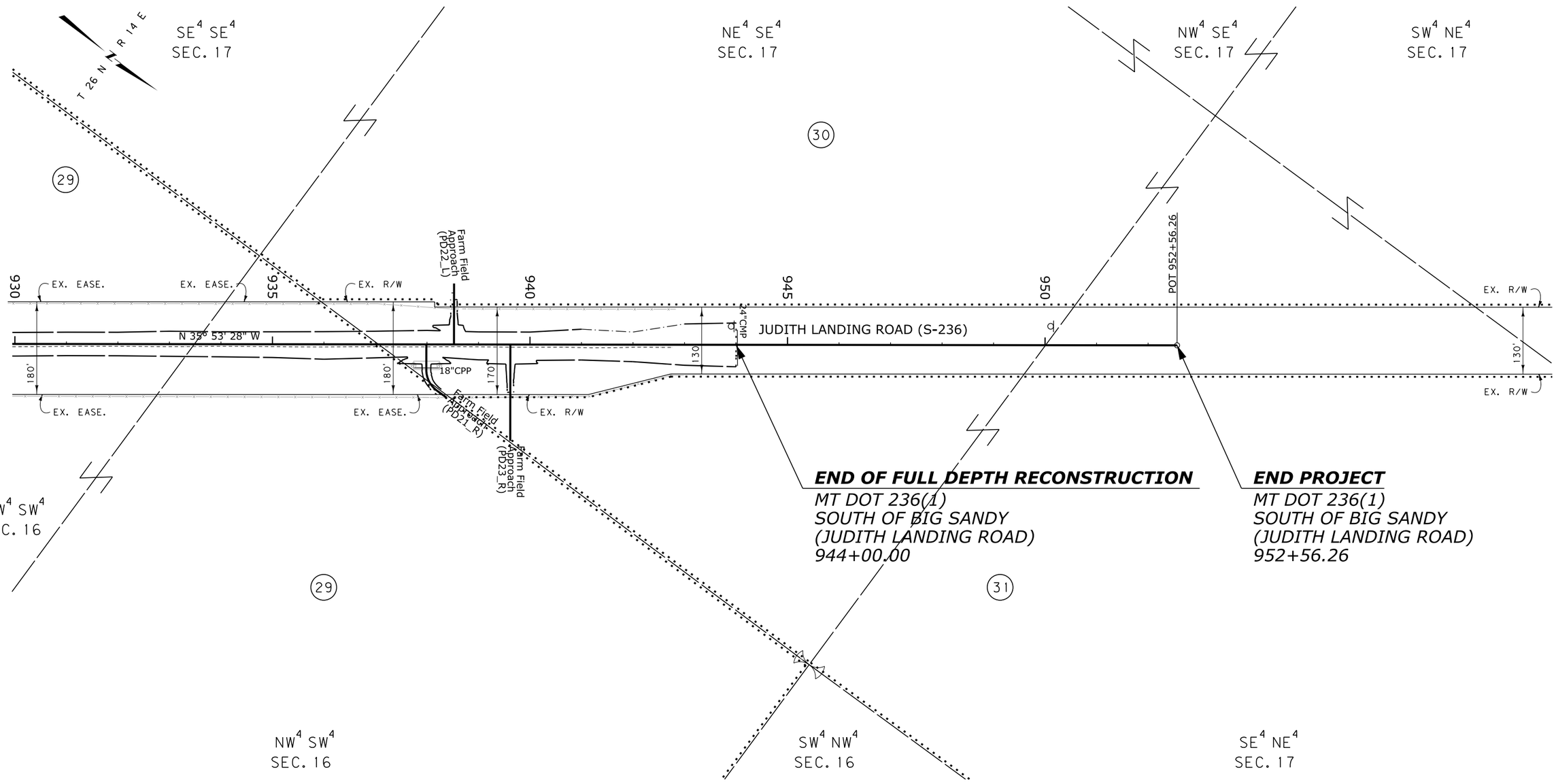

CONSTRUCTION LIMITS	MAP REVISED
CUT SECTION (TOP OF CUT)	
TRANSITION	
TOE OF FILL	
BACKSLOPE LIMITS INCLUDE ROUNDING	FHWA/MDT APPROVAL 1-13-16

3	MDT MONTANA DEPARTMENT OF TRANSPORTATION	c:\dgn\9137000ropln008.dgn
2		5/26/2016
1		11:31:21 AM CPS - U1068

NOTES:
1. THE PROPOSED R/W LINE WHERE A SPIRAL CURVE TRANSITION IS USED IS A CHORD RATHER THAN A CONCENTRIC CURVE.
2. ALL STATIONS AND OFFSETS FOR R/W BREAKS ARE IN REFERENCE TO THE R/W BASELINE.

MONTANA DEPARTMENT OF TRANSPORTATION

RIGHT OF WAY PLAN

CHOUTEAU COUNTY

SCALE 1" = 100'

0 50' 100' 200' 300'