STATE	RIGHT OF WAY	SHEET NO.	TOTAL SHEETS
MONTANA		1	12
R/W ID.	HSIP 14-6(24)240		
PROJECT NO.	9083-024-000		

SF 159 SO INGOMAR SLP FLTN

MONTANA DEPARTMENT OF TRANSPORTATION

RIGHT OF WAY PLAN

FEDERAL AID PROJECT - HSIP 14-6(24)240

SF 159 SO INGOMAR SLP FLTN

ROSEBUD COUNTY

LENGTH 5.0 MILES

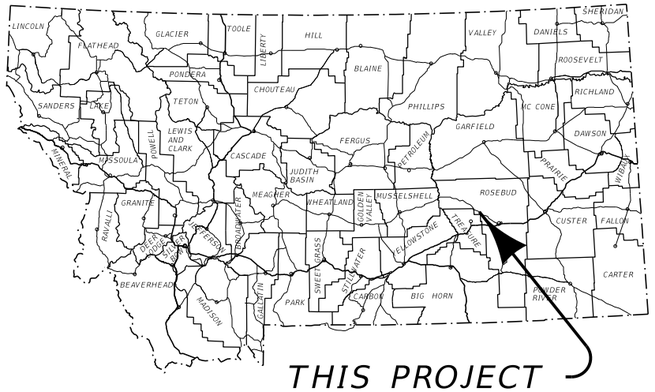

PLAN LEGEND

- PROPOSED RIGHT OF WAY LINE
- EXISTING RIGHT OF WAY LINE
- RAILROAD RIGHT OF WAY LINE
- RIGHT OF WAY BASELINE
- STK'D CENTERLINE
- SECTION LINE
- OWNERSHIP BOUNDARY
- FULL ACCESS CONTROL (AC)
- LIMITED ACCESS CONTROL
- EXISTING FULL ACCESS CONTROL (EFAC)
- EXISTING LIMITED ACCESS CONTROL (ELAC)
- PRESENT TRAVELED WAY (P.T.W.)
- FENCE LINE
- EXISTING GUARDRAIL
- PROPOSED GUARDRAIL
- GATE IN FENCE
- CATTLE GUARD: EXIST. - PROPOSED
- SECTION CORNER (FOUND / UNFOUND)
- 1/4 SECTION CORNER
- CLOSING CORNER
- MEANDER CORNER
- CENTER OF SECTION
- 1/16 SECTION CORNER FOUND
- RIGHT OF WAY MONUMENT (FOUND / CALCULATED)
- PROPERTY CORNER PIN
- POWER POLE IN PLACE
- TELEPHONE POLE IN PLACE
- TELEGRAPH POLE IN PLACE
- LIGHT POLE
- PROPOSED CULVERT
- EXISTING CULVERT
- OUTLET DITCH
- INLET DITCH
- EXISTING DITCH
- CHANNEL CHANGES (CH. CH.)
- DITCH BLOCK
- RIPRAP
- BRIDGES
- RAILROADS
- PARCEL NUMBERS
- APPROACH: EXIST. - PROPOSED

N

ASSOCIATED PROJECTS
HSIP 14-6(20)240 P.E.

RELATED PROJECTS
FAP-328
FAP-328-G
FAP-328-H

SEE SHEET NO. 2 FOR OWNERSHIP NAMES, ADDRESSES, AREAS, ETC.

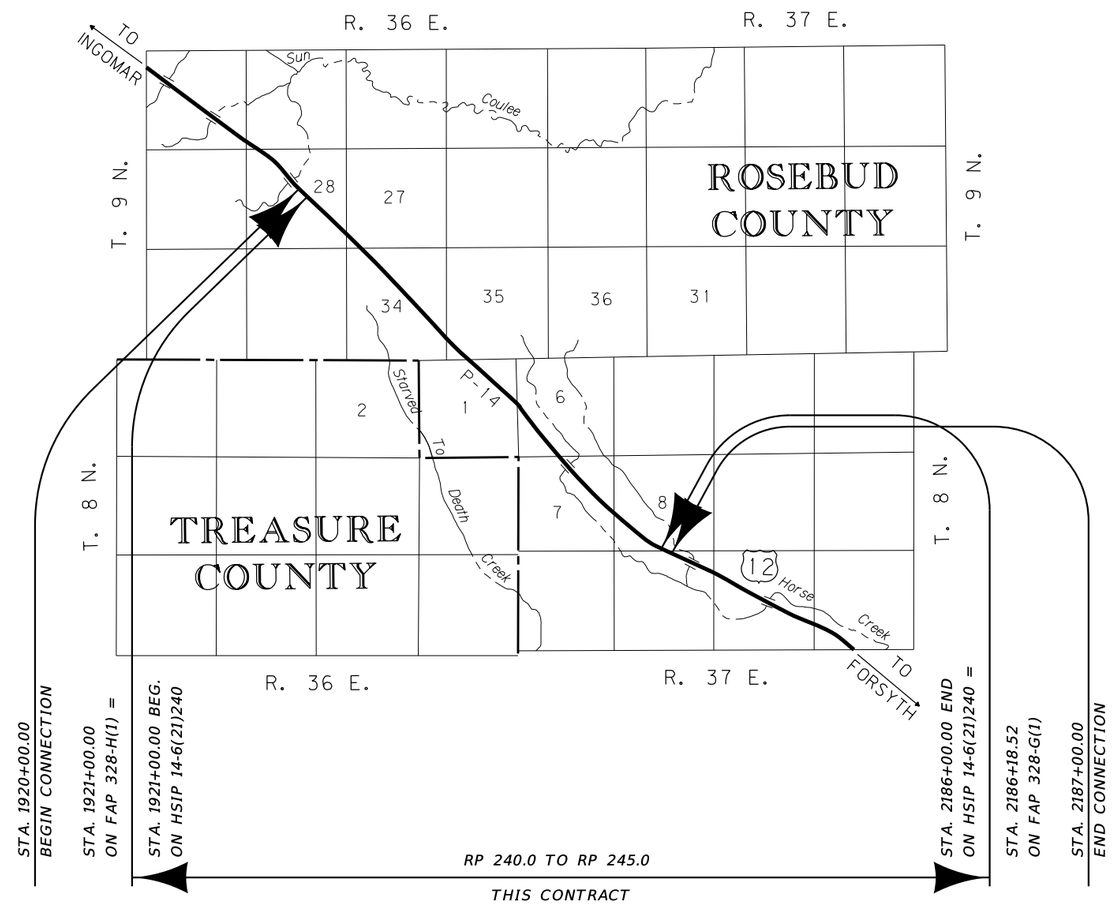

FOR EXISTING R/W RETRACEMENT, SEE CERTIFICATE OF SURVEY NO. 0121840.

GRID STATE PLANE COORDINATES

THIS IS A STATE PLANE COORDINATE PROJECT. ALL DIMENSIONS, DISTANCES AND AREAS ON THIS PROJECT ARE GRID, EXCEPT FOR THE EXISTING R/W WIDTH DIMENSION, WHICH IS RECORD.
THE COMBINATION SCALE FACTOR IS 0.99930177.

CONSTRUCTION LIMITS
CUT SECTION (TOP OF CUT)
TOE OF FILL

MAP REVISED

FHWA/MDT APPROVAL PENDING

3	MDT	MONTANA DEPARTMENT OF TRANSPORTATION
2		C:\DGN\9083000rottl001.dgn
1		9/21/2021 2:05:30 PM CPS - U3193

STATE	RIGHT OF WAY	SHEET NO.	TOTAL SHEETS
MONTANA		2	12
R/W ID.	HSIP 14-6(24)240		
PROJECT NO.	9083-024-000		

SF 159 SO INGOMAR SLP FLTN

OWNERSHIP

PARCEL	NAME	ADDRESS	TOTAL AREA	GROSS R/W AREA	EX. EASE. AREA	NET AREA	CONST. PMT. AREA	EASEMENT AREA	SHEET NO.
1	71 RANCH LP	40 71 RANCH LN., MARTINSDALE, MT 59053		FOR NEGOTIATIONS ONLY					3-7
2	71 RANCH LP	40 71 RANCH LN., MARTINSDALE, MT 59053	160+ AC	2.84 AC		2.84 AC			3-5
3	SUN COULEE, LLC	40 71 RANCH LN., MARTINSDALE, MT 59053	17.35± AC	2.02 AC		2.02 AC			5-6
4	NORBERT RONALD KNIEPP, ETAL	1986 LEMONTREE LN., COLLINSVILLE, IL 62234		FOR NEGOTIATIONS ONLY					5-6
5	NORBERT RONALD KNIEPP, ETAL	1986 LEMONTREE LN., COLLINSVILLE, IL 62234		OWNER NOTIFICATION ONLY					5-6
6	71 RANCH LP	40 71 RANCH LN., MARTINSDALE, MT 59053	160+ AC	8.50 AC		8.50 AC	0.28 AC		6-12
7	CLYDE ELLIS ROE AND MARY GHIO	1501 W. WILLOW ST., STOCKTON, CA 95203		OWNER NOTIFICATION ONLY					7
8	71 RANCH LP	40 71 RANCH LN, MARTINSDALE, MT 59053		FOR NEGOTIATIONS ONLY					7-9
9	BERNARD E. HEIN, ETAL	PO BOX 81, FORSYTH, MT 59327		OWNER NOTIFICATION ONLY					9-10
10	BERNARD E. HEIN, ETAL	PO BOX 81, FORSYTH, MT 59327		OWNER NOTIFICATION ONLY					9
11	SR BREWER LLC	PO BOX 5027, FORSYTH, MT 59327		OWNER NOTIFICATION ONLY					9-12

RIGHT-OF-WAY COORDINATE ASCII FILES

R/W BREAK COORDS: 9083000R0BRK001.TXT
R/W BASELINE COORDS: 9083000R0BAS001.TXT

ALL FILES ARE LOCATED ON THE CADD SERVER
IN THE R0 DIRECTORY, UNDER PROJECT: 9083000

CONSTRUCTION LIMITS

CUT SECTION — TOP OF CUT

TOE OF FILL

MAP REVISED

FHWA/MDT APPROVAL
PENDING

3	MDT MONTANA DEPARTMENT OF TRANSPORTATION	C:\DGN\9083000roown001.dgn
2		9/21/2021
1		2:05:52 PM CPS - U3193

NOTES:

1. THE PROPOSED R/W LINE WHERE A SPIRAL CURVE TRANSITION IS USED IS A CHORD RATHER THAN A CONCENTRIC CURVE.
2. ALL STATIONS AND OFFSETS FOR R/W BREAKS ARE IN REFERENCE TO THE R/W BASELINE.

FOR EXISTING R/W RETRACEMENT, SEE
CERTIFICATE OF SURVEY NO. 0121840.

GRID STATE PLANE COORDINATES

THIS IS A STATE PLANE COORDINATE PROJECT. ALL DIMENSIONS, DISTANCES AND AREAS ON THIS PROJECT ARE GRID, EXCEPT FOR THE EXISTING R/W WIDTH DIMENSION, WHICH IS RECORD.
THE COMBINATION SCALE FACTOR IS 0.99930177.

MONTANA DEPARTMENT OF TRANSPORTATION

RIGHT OF WAY PLAN

ROSEBUD COUNTY

STATE	RIGHT OF WAY	SHEET NO.	TOTAL SHEETS
MONTANA		3	12
R/W ID.	HSIP 14-6(24)240		
PROJECT NO.	9083-024-000		

SF 159 SO INGOMAR SLP FLTN

SEE SHEET NO. 2 FOR OWNERSHIP NAMES, ADDRESSES, AREAS, ETC.

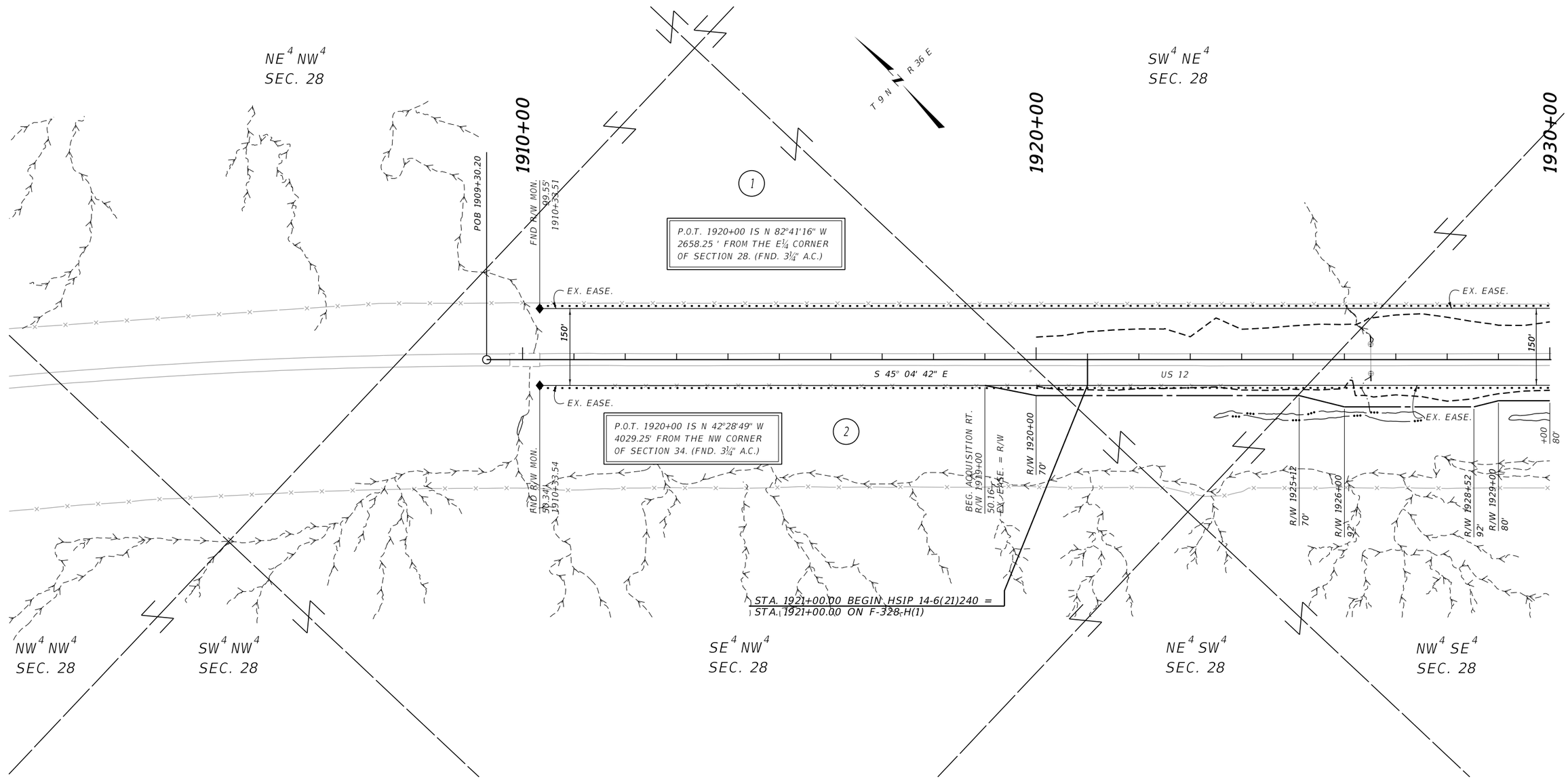

CONSTRUCTION LIMITS	MAP REVISED
CUT SECTION — TOP OF CUT	
TOE OF FILL	
	FHWA/MDT APPROVAL 08/18/21

3	MDT	MONTANA DEPARTMENT OF TRANSPORTATION
2		C:\DGN\9083000ropln001.dgn
1		9/21/2021
		2:06:09 PM CPS - U3193

NOTES:

1. THE PROPOSED R/W LINE WHERE A SPIRAL CURVE TRANSITION IS USED IS A CHORD RATHER THAN A CONCENTRIC CURVE.
2. ALL STATIONS AND OFFSETS FOR R/W BREAKS ARE IN REFERENCE TO THE R/W BASELINE.

FOR EXISTING R/W RETRACEMENT, SEE CERTIFICATE OF SURVEY NO. 0121840.

GRID STATE PLANE COORDINATES

THIS IS A STATE PLANE COORDINATE PROJECT. ALL DIMENSIONS, DISTANCES AND AREAS ON THIS PROJECT ARE GRID, EXCEPT FOR THE EXISTING R/W WIDTH DIMENSION, WHICH IS RECORD.
THE COMBINATION SCALE FACTOR IS 0.99930177.

MONTANA DEPARTMENT OF TRANSPORTATION

RIGHT OF WAY PLAN

ROSEBUD COUNTY

SCALE 1"=100'

0 50' 100' 200' 300'

STATE	RIGHT OF WAY	SHEET NO.	TOTAL SHEETS
MONTANA		4	12
R/W ID.	HSIP 14-6(24)240		
PROJECT NO.	9083-024-000		

SF 159 SO INGOMAR SLP FLTN

SEE SHEET NO. 2 FOR OWNERSHIP NAMES, ADDRESSES, AREAS, ETC.

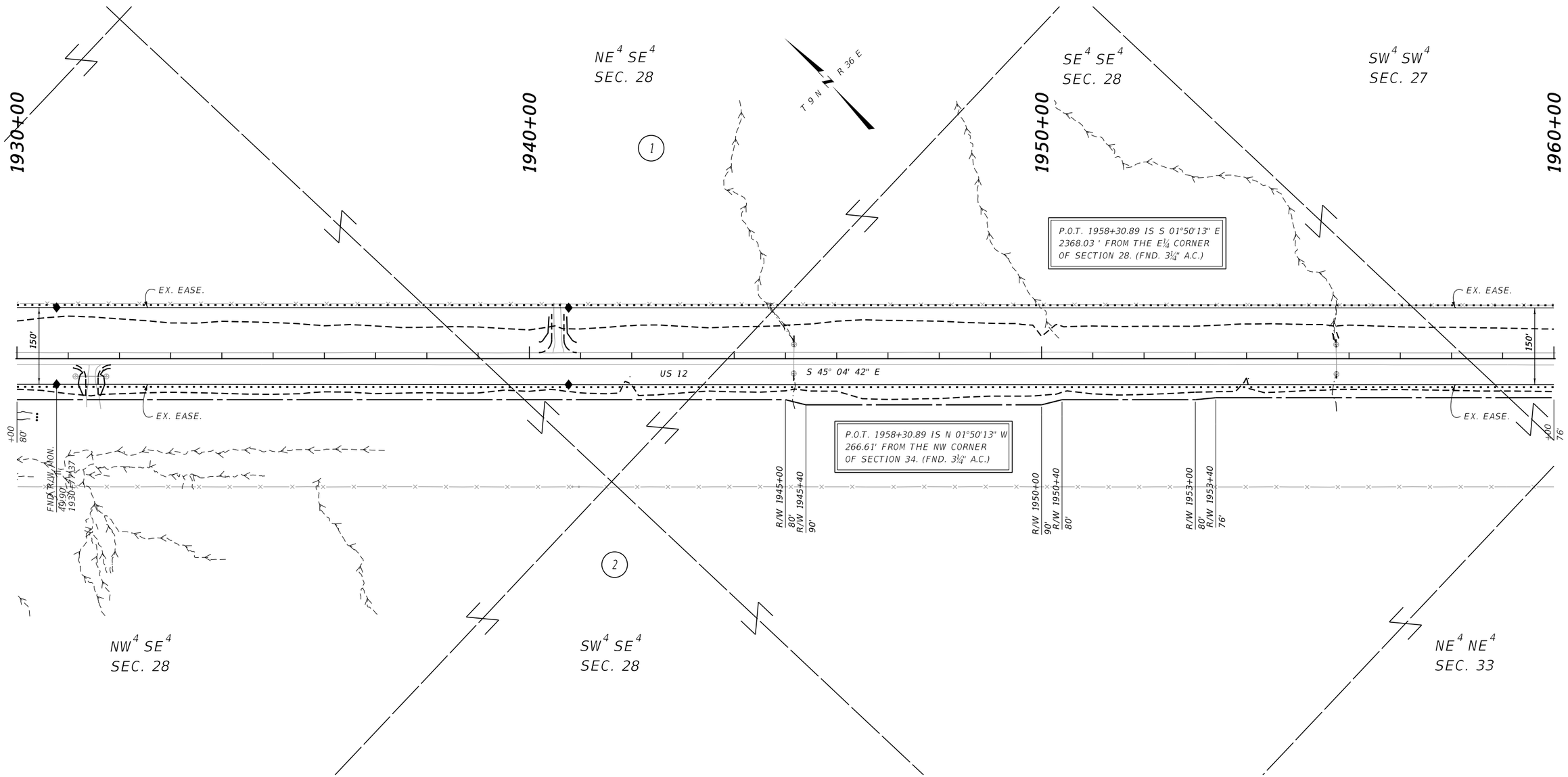

CONSTRUCTION LIMITS

CUT SECTION — TOP OF CUT

TOE OF FILL

MAP REVISED

FHWA/MDT APPROVAL
08/18/21

3	MDT MONTANA DEPARTMENT OF TRANSPORTATION	C:\DGN\9083000ropln001.dgn
2		9/21/2021
1		2:06:14 PM CPS - U3193

NOTES:

1. THE PROPOSED R/W LINE WHERE A SPIRAL CURVE TRANSITION IS USED IS A CHORD RATHER THAN A CONCENTRIC CURVE.
2. ALL STATIONS AND OFFSETS FOR R/W BREAKS ARE IN REFERENCE TO THE R/W BASELINE.

FOR EXISTING R/W RETRACEMENT, SEE CERTIFICATE OF SURVEY NO. 0121840.

GRID STATE PLANE COORDINATES

THIS IS A STATE PLANE COORDINATE PROJECT. ALL DIMENSIONS, DISTANCES AND AREAS ON THIS PROJECT ARE GRID, EXCEPT FOR THE EXISTING R/W WIDTH DIMENSION, WHICH IS RECORD.
THE COMBINATION SCALE FACTOR IS 0.99930177.

MONTANA DEPARTMENT OF TRANSPORTATION

RIGHT OF WAY PLAN

ROSEBUD COUNTY

SCALE 1"=100'

0 50' 100' 200' 300'

STATE	RIGHT OF WAY	SHEET NO.	TOTAL SHEETS
MONTANA		5	12
R/W ID.	HSIP 14-6(24)240		
PROJECT NO.	9083-024-000		

SF 159 SO INGOMAR SLP FLTN

SEE SHEET NO. 2 FOR OWNERSHIP NAMES, ADDRESSES, AREAS, ETC.

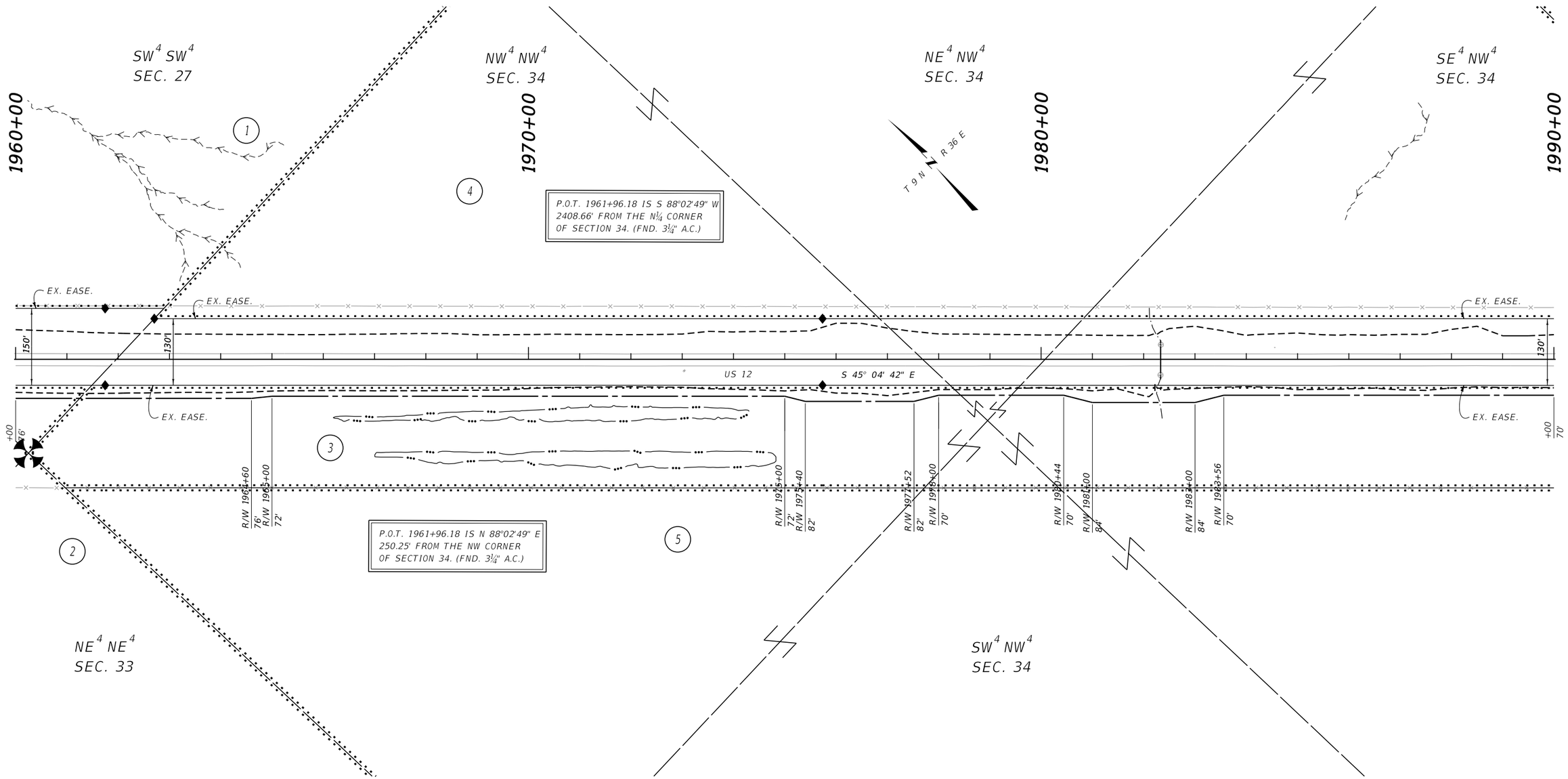

CONSTRUCTION LIMITS	MAP REVISED 09/21/21
CUT SECTION (TOP OF CUT)	
TOE OF FILL	
	FHWA/MDT APPROVAL 08/18/21

3	MDT MONTANA DEPARTMENT OF TRANSPORTATION	C:\DGN\9083000ropln001.dgn
2		9/21/2021
1		2:06:18 PM CPS - U3193

NOTES:

1. THE PROPOSED R/W LINE WHERE A SPIRAL CURVE TRANSITION IS USED IS A CHORD RATHER THAN A CONCENTRIC CURVE.
2. ALL STATIONS AND OFFSETS FOR R/W BREAKS ARE IN REFERENCE TO THE R/W BASELINE.

FOR EXISTING R/W RETRACEMENT, SEE CERTIFICATE OF SURVEY NO. 0121840.

GRID STATE PLANE COORDINATES

THIS IS A STATE PLANE COORDINATE PROJECT. ALL DIMENSIONS, DISTANCES AND AREAS ON THIS PROJECT ARE GRID, EXCEPT FOR THE EXISTING R/W WIDTH DIMENSION, WHICH IS RECORD.
THE COMBINATION SCALE FACTOR IS 0.99930177.

MONTANA DEPARTMENT OF TRANSPORTATION

RIGHT OF WAY PLAN

ROSEBUD COUNTY

SCALE 1"=100'

0 50' 100' 200' 300'

STATE	RIGHT OF WAY	SHEET NO.	TOTAL SHEETS
MONTANA		6	12
R/W ID.	HSIP 14-6(24)240		
PROJECT NO.	9083-024-000		

SF 159 SO INGOMAR SLP FLTN

SEE SHEET NO. 2 FOR OWNERSHIP NAMES, ADDRESSES, AREAS, ETC.

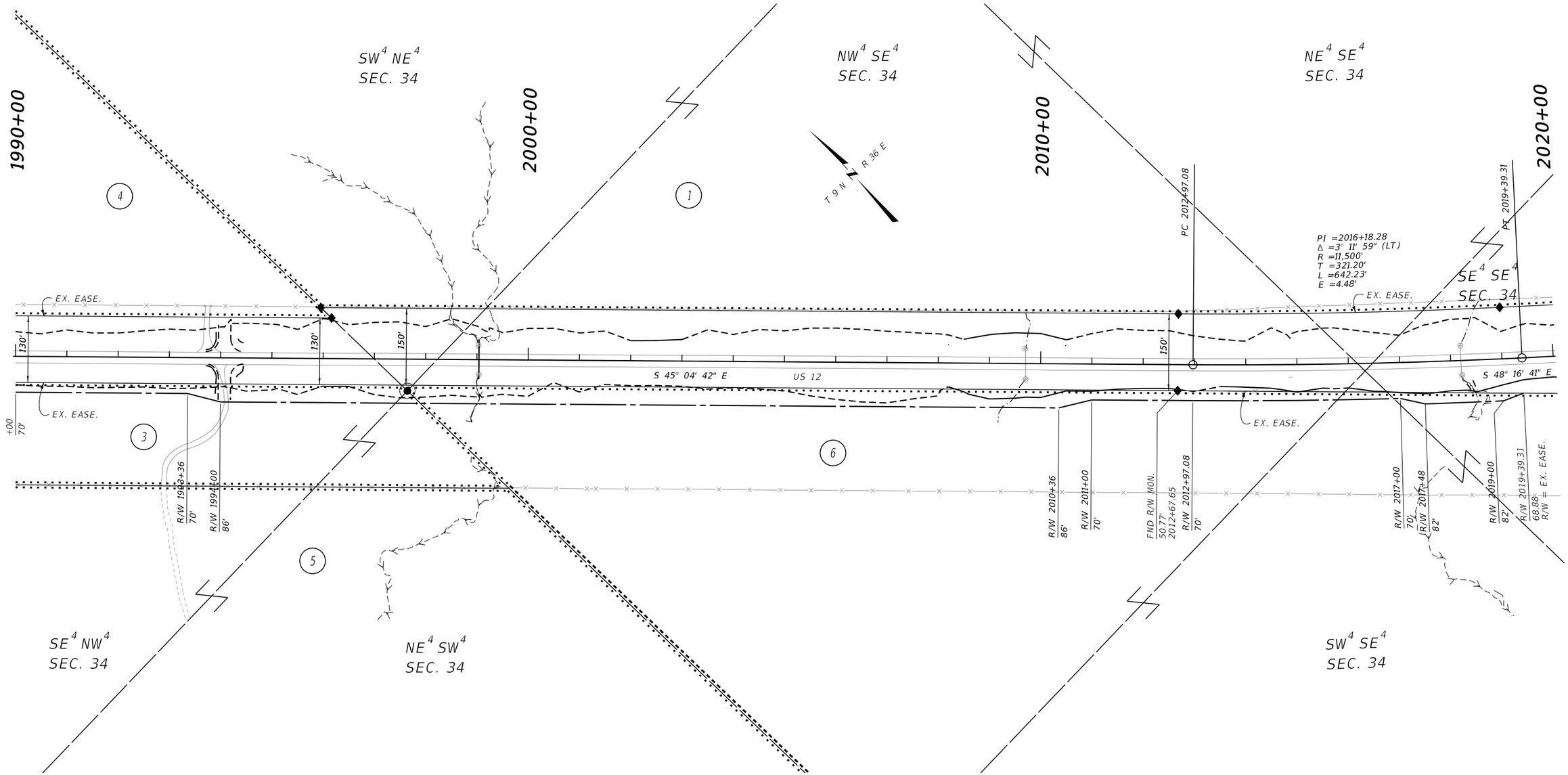

CONSTRUCTION LIMITS

CUT SECTION (TOP OF CUT)

TOE OF FILL

MAP REVISED 09/21/21

FHWA/MDT APPROVAL
08/18/21

3	MDT	MONTANA DEPARTMENT OF TRANSPORTATION
2		C:\DGN\9083000ropln002.dgn
1		9/21/2021
		2:06:33 PM CPS - U3193

NOTES:

1. THE PROPOSED R/W LINE WHERE A SPIRAL CURVE TRANSITION IS USED IS A CHORD RATHER THAN A CONCENTRIC CURVE.
2. ALL STATIONS AND OFFSETS FOR R/W BREAKS ARE IN REFERENCE TO THE R/W BASELINE.

FOR EXISTING R/W RETRACEMENT, SEE CERTIFICATE OF SURVEY NO. 0121840.

GRID STATE PLANE COORDINATES

THIS IS A STATE PLANE COORDINATE PROJECT. ALL DIMENSIONS, DISTANCES AND AREAS ON THIS PROJECT ARE GRID, EXCEPT FOR THE EXISTING R/W WIDTH DIMENSION, WHICH IS RECORD.
THE COMBINATION SCALE FACTOR IS 0.99930177.

MONTANA DEPARTMENT OF TRANSPORTATION

RIGHT OF WAY PLAN

ROSEBUD COUNTY

SCALE 1"=100'

0 50' 100' 200' 300'

STATE	RIGHT OF WAY	SHEET NO.	TOTAL SHEETS
MONTANA		7	12
R/W ID.	HSIP 14-6(24)240		
PROJECT NO.	9083-024-000		

SF 159 SO INGOMAR SLP FLTN

SEE SHEET NO. 2 FOR OWNERSHIP NAMES, ADDRESSES, AREAS, ETC.

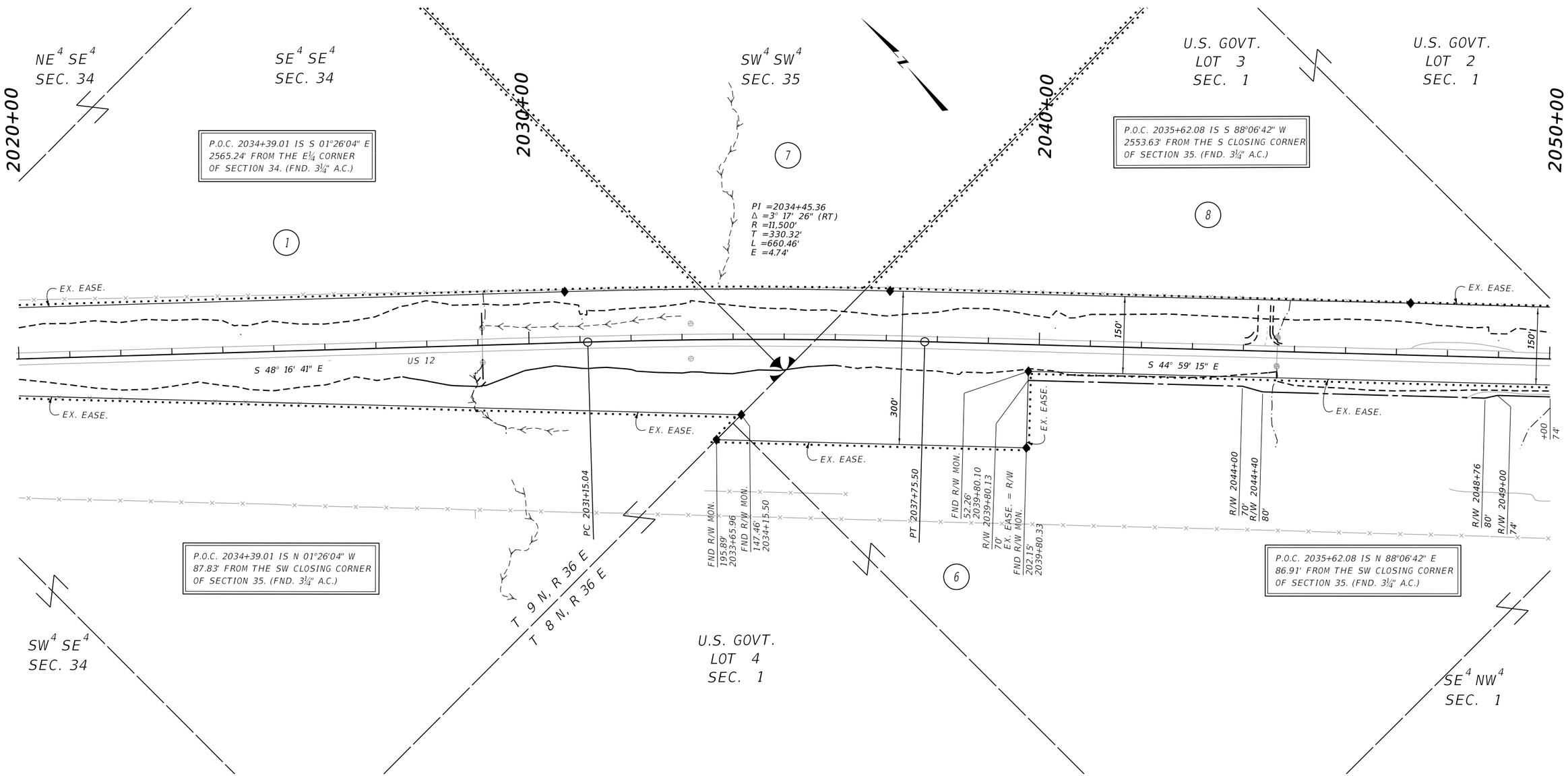

CONSTRUCTION LIMITS

CUT SECTION — TOP OF CUT

TOE OF FILL

MAP REVISED

FHWA/MDT APPROVAL
08/18/21

3	MDT MONTANA DEPARTMENT OF TRANSPORTATION	C:\DGN\9083000ropln002.dgn
2		9/21/2021
1		2:06:37 PM CPS - U3193

NOTES:

1. THE PROPOSED R/W LINE WHERE A SPIRAL CURVE TRANSITION IS USED IS A CHORD RATHER THAN A CONCENTRIC CURVE.
2. ALL STATIONS AND OFFSETS FOR R/W BREAKS ARE IN REFERENCE TO THE R/W BASELINE.

FOR EXISTING R/W RETRACEMENT, SEE CERTIFICATE OF SURVEY NO. 0121840.

GRID STATE PLANE COORDINATES

THIS IS A STATE PLANE COORDINATE PROJECT. ALL DIMENSIONS, DISTANCES AND AREAS ON THIS PROJECT ARE GRID, EXCEPT FOR THE EXISTING R/W WIDTH DIMENSION, WHICH IS RECORD.
THE COMBINATION SCALE FACTOR IS 0.99930177.

MONTANA DEPARTMENT OF TRANSPORTATION

RIGHT OF WAY PLAN

ROSEBUD COUNTY

SCALE 1"=100'

0 50' 100' 200' 300'

STATE	RIGHT OF WAY	SHEET NO.	TOTAL SHEETS
MONTANA		8	12
R/W ID.	HSIP 14-6(24)240		
PROJECT NO.	9083-024-000		

SF 159 SO INGOMAR SLP FLTN

SEE SHEET NO. 2 FOR OWNERSHIP NAMES, ADDRESSES, AREAS, ETC.

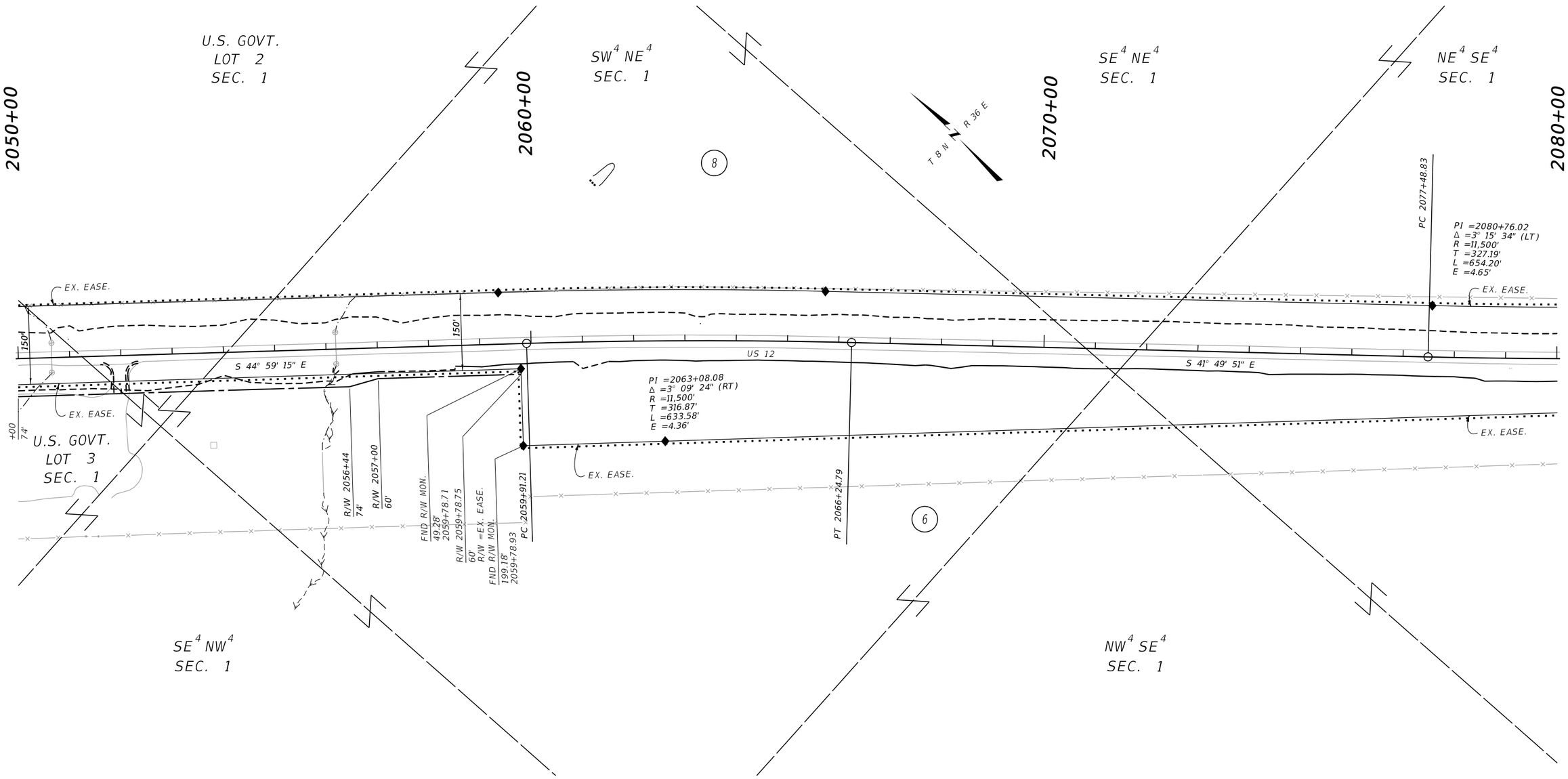

CONSTRUCTION LIMITS	MAP REVISED
CUT SECTION — TOP OF CUT	
TOE OF FILL	
	FHWA/MDT APPROVAL 08/18/21

3	MDT	MONTANA DEPARTMENT OF TRANSPORTATION
2		C:\DGN\9083000ropln002.dgn
1		9/21/2021
		2:06:41 PM CPS - U3193

NOTES:

1. THE PROPOSED R/W LINE WHERE A SPIRAL CURVE TRANSITION IS USED IS A CHORD RATHER THAN A CONCENTRIC CURVE.
2. ALL STATIONS AND OFFSETS FOR R/W BREAKS ARE IN REFERENCE TO THE R/W BASELINE.

FOR EXISTING R/W RETRACEMENT, SEE CERTIFICATE OF SURVEY NO. 0121840.

GRID STATE PLANE COORDINATES

THIS IS A STATE PLANE COORDINATE PROJECT. ALL DIMENSIONS, DISTANCES AND AREAS ON THIS PROJECT ARE GRID, EXCEPT FOR THE EXISTING R/W WIDTH DIMENSION, WHICH IS RECORD.
THE COMBINATION SCALE FACTOR IS 0.99930177.

MONTANA DEPARTMENT OF TRANSPORTATION

RIGHT OF WAY PLAN

ROSEBUD COUNTY

SCALE 1"=100'

0 50' 100' 200' 300'

STATE	RIGHT OF WAY	SHEET NO.	TOTAL SHEETS
MONTANA		9	12
R/W ID.	HSIP 14-6(24)240		
PROJECT NO.	9083-024-000		

SF 159 SO INGOMAR SLP FLTN

SEE SHEET NO. 2 FOR OWNERSHIP NAMES, ADDRESSES, AREAS, ETC.

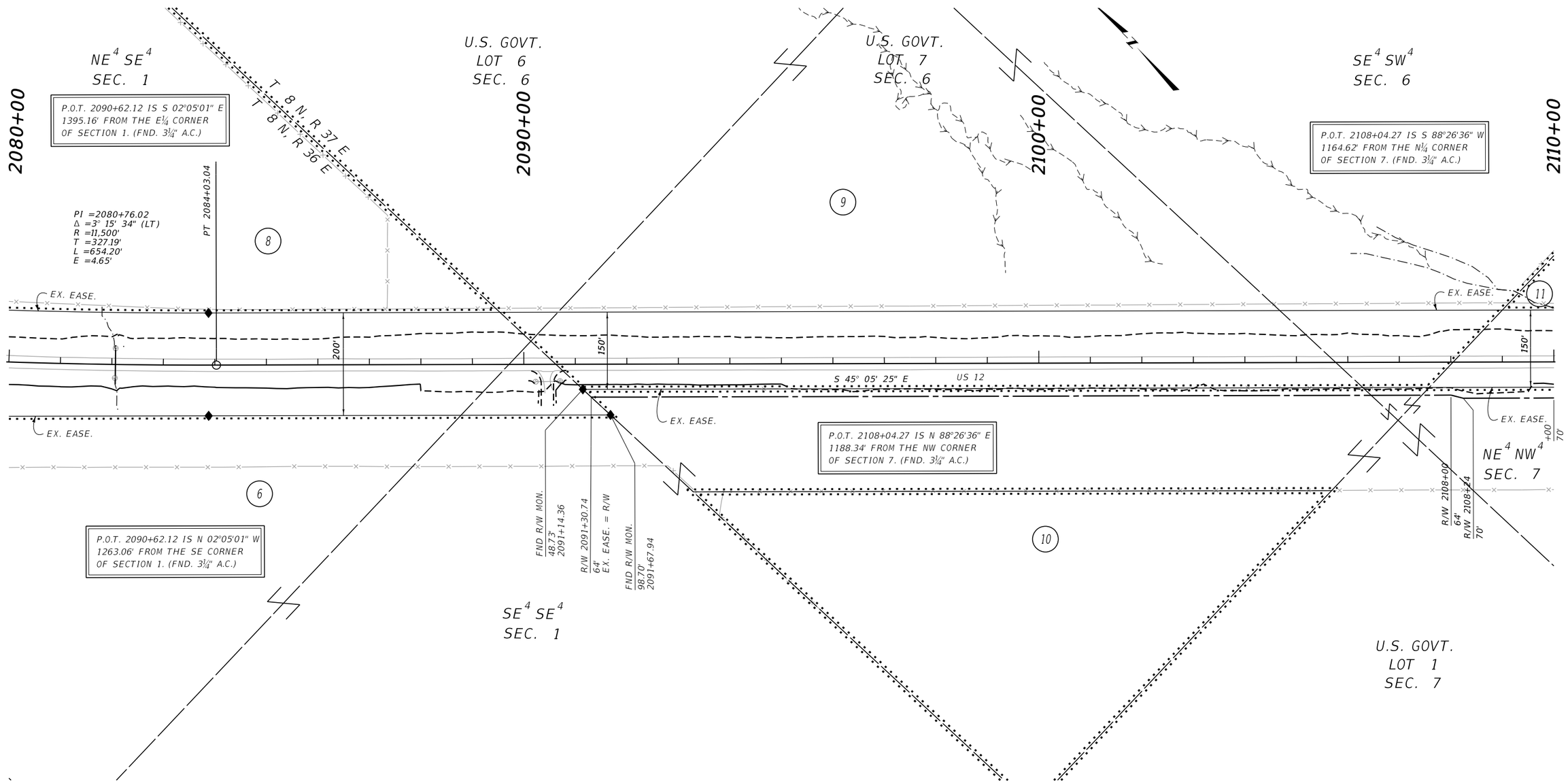

CONSTRUCTION LIMITS

CUT SECTION — TOP OF CUT

TOE OF FILL

MAP REVISED

FHWA/MDT APPROVAL
08/18/21

3	MDT MONTANA DEPARTMENT OF TRANSPORTATION	C:\DGN\9083000ropln003.dgn
2		9/21/2021
1		2:06:56 PM CPS - U3193

NOTES:

1. THE PROPOSED R/W LINE WHERE A SPIRAL CURVE TRANSITION IS USED IS A CHORD RATHER THAN A CONCENTRIC CURVE.
2. ALL STATIONS AND OFFSETS FOR R/W BREAKS ARE IN REFERENCE TO THE R/W BASELINE.

FOR EXISTING R/W RETRACEMENT, SEE CERTIFICATE OF SURVEY NO. 0121840.

GRID STATE PLANE COORDINATES

THIS IS A STATE PLANE COORDINATE PROJECT. ALL DIMENSIONS, DISTANCES AND AREAS ON THIS PROJECT ARE GRID, EXCEPT FOR THE EXISTING R/W WIDTH DIMENSION, WHICH IS RECORD.
THE COMBINATION SCALE FACTOR IS 0.99930177.

MONTANA DEPARTMENT OF TRANSPORTATION

RIGHT OF WAY PLAN

ROSEBUD COUNTY

SCALE 1"=100'

0 50' 100' 200' 300'

STATE	RIGHT OF WAY	SHEET NO.	TOTAL SHEETS
MONTANA		10	12
R/W ID.	HSIP 14-6(24)240		
PROJECT NO.	9083-024-000		

SF 159 SO INGOMAR SLP FLTN

SEE SHEET NO. 2 FOR OWNERSHIP NAMES, ADDRESSES, AREAS, ETC.

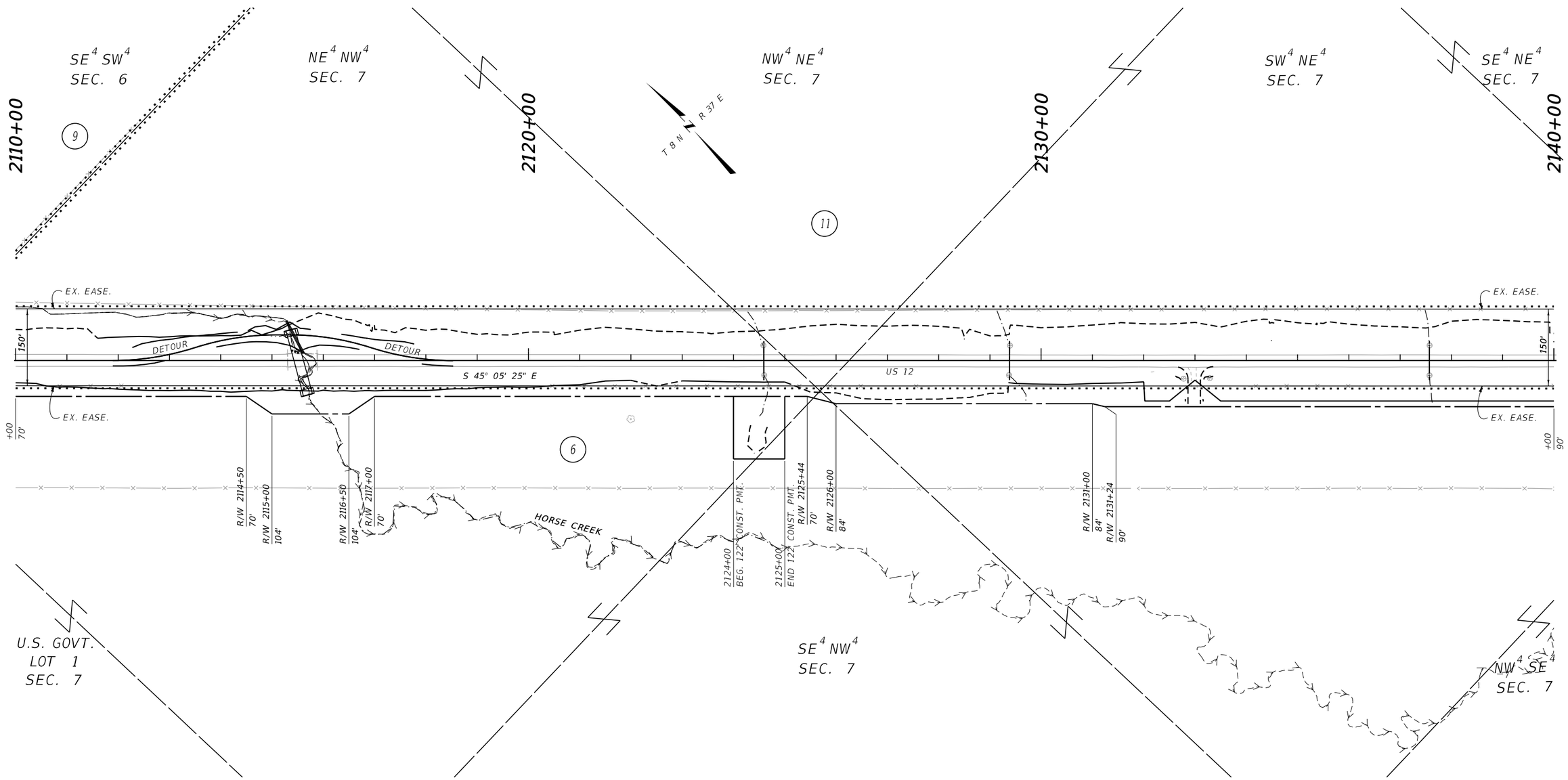

CONSTRUCTION LIMITS

CUT SECTION — TOP OF CUT

TOE OF FILL

MAP REVISED

FHWA/MDT APPROVAL
08/18/21

3	MDT	MONTANA DEPARTMENT OF TRANSPORTATION
2		C:\DGN\9083000ropln003.dgn
1		9/21/2021
		2:07:00 PM CPS - U3193

NOTES:

1. THE PROPOSED R/W LINE WHERE A SPIRAL CURVE TRANSITION IS USED IS A CHORD RATHER THAN A CONCENTRIC CURVE.
2. ALL STATIONS AND OFFSETS FOR R/W BREAKS ARE IN REFERENCE TO THE R/W BASELINE.

FOR EXISTING R/W RETRACEMENT, SEE CERTIFICATE OF SURVEY NO. 0121840.

GRID STATE PLANE COORDINATES

THIS IS A STATE PLANE COORDINATE PROJECT. ALL DIMENSIONS, DISTANCES AND AREAS ON THIS PROJECT ARE GRID, EXCEPT FOR THE EXISTING R/W WIDTH DIMENSION, WHICH IS RECORD.
THE COMBINATION SCALE FACTOR IS 0.99930177.

MONTANA DEPARTMENT OF TRANSPORTATION

RIGHT OF WAY PLAN

ROSEBUD COUNTY

SCALE 1"=100'

0 50' 100' 200' 300'

STATE	RIGHT OF WAY	SHEET NO.	TOTAL SHEETS
MONTANA		11	12
R/W ID.	HSIP 14-6(24)240		
PROJECT NO.	9083-024-000		

SF 159 SO INGOMAR SLP FLTN

SEE SHEET NO. 2 FOR OWNERSHIP NAMES, ADDRESSES, AREAS, ETC.

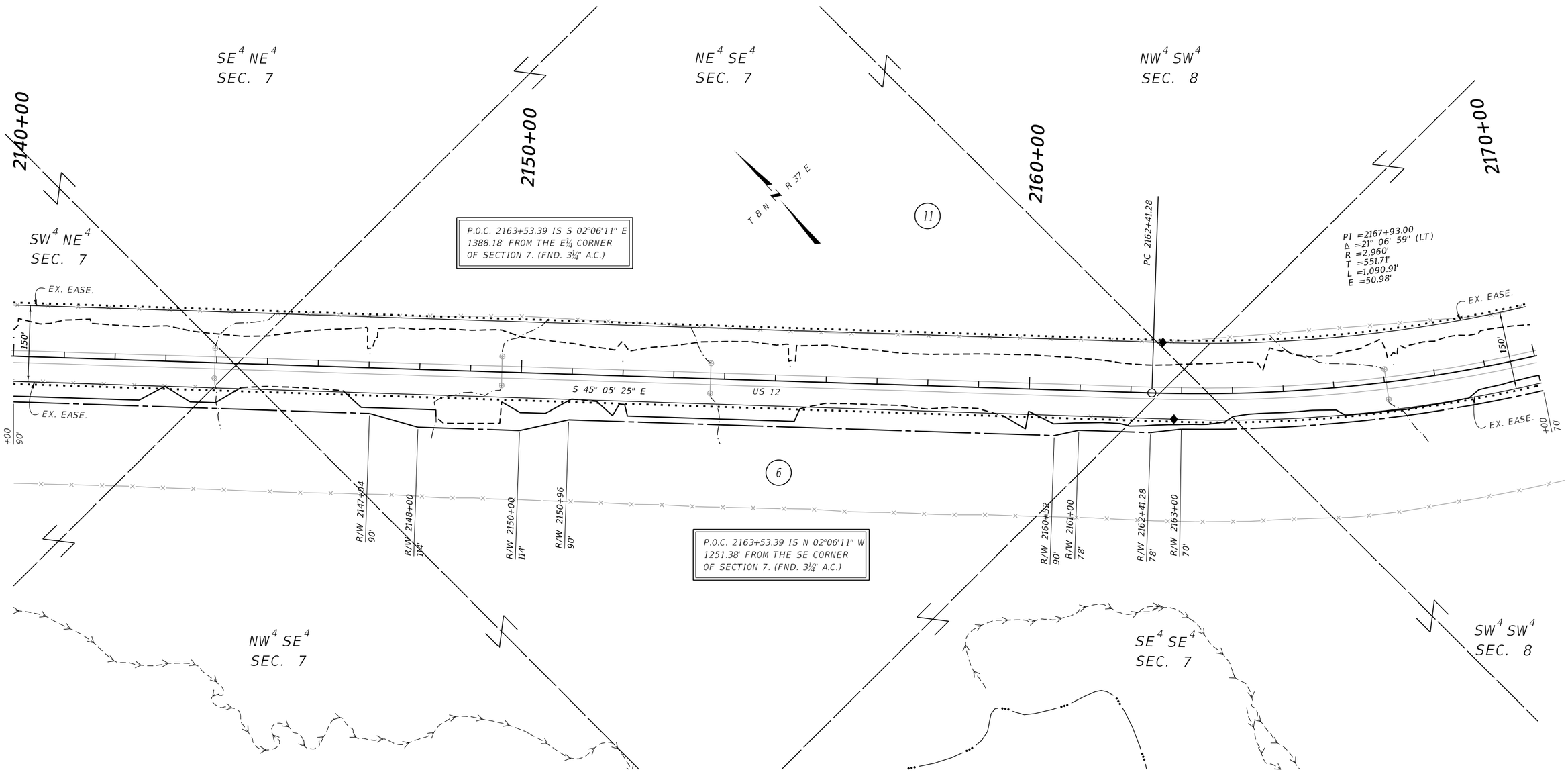

CONSTRUCTION LIMITS	MAP REVISED
TOP OF CUT — CUT SECTION	
TOE OF FILL	
	FHWA/MDT APPROVAL 08/18/21

3	MDT	MONTANA DEPARTMENT OF TRANSPORTATION
2		9/21/2021
1		2:07:04 PM CPS - U3193

C:\DGN\9083000ropln003.dgn

NOTES:

1. THE PROPOSED R/W LINE WHERE A SPIRAL CURVE TRANSITION IS USED IS A CHORD RATHER THAN A CONCENTRIC CURVE.
2. ALL STATIONS AND OFFSETS FOR R/W BREAKS ARE IN REFERENCE TO THE R/W BASELINE.

FOR EXISTING R/W RETRACEMENT, SEE CERTIFICATE OF SURVEY NO. 0121840.

GRID STATE PLANE COORDINATES

THIS IS A STATE PLANE COORDINATE PROJECT. ALL DIMENSIONS, DISTANCES AND AREAS ON THIS PROJECT ARE GRID, EXCEPT FOR THE EXISTING R/W WIDTH DIMENSION, WHICH IS RECORD.
THE COMBINATION SCALE FACTOR IS 0.99930177.

MONTANA DEPARTMENT OF TRANSPORTATION

RIGHT OF WAY PLAN

ROSEBUD COUNTY

SCALE 1"=100'

0 50' 100' 200' 300'

STATE	RIGHT OF WAY	SHEET NO.	TOTAL SHEETS
MONTANA		12	12
R/W ID.	HSIP 14-6(24)240		
PROJECT NO.	9083-024-000		

SF 159 SO INGOMAR SLP FLTN

SEE SHEET NO. 2 FOR OWNERSHIP NAMES, ADDRESSES, AREAS, ETC.

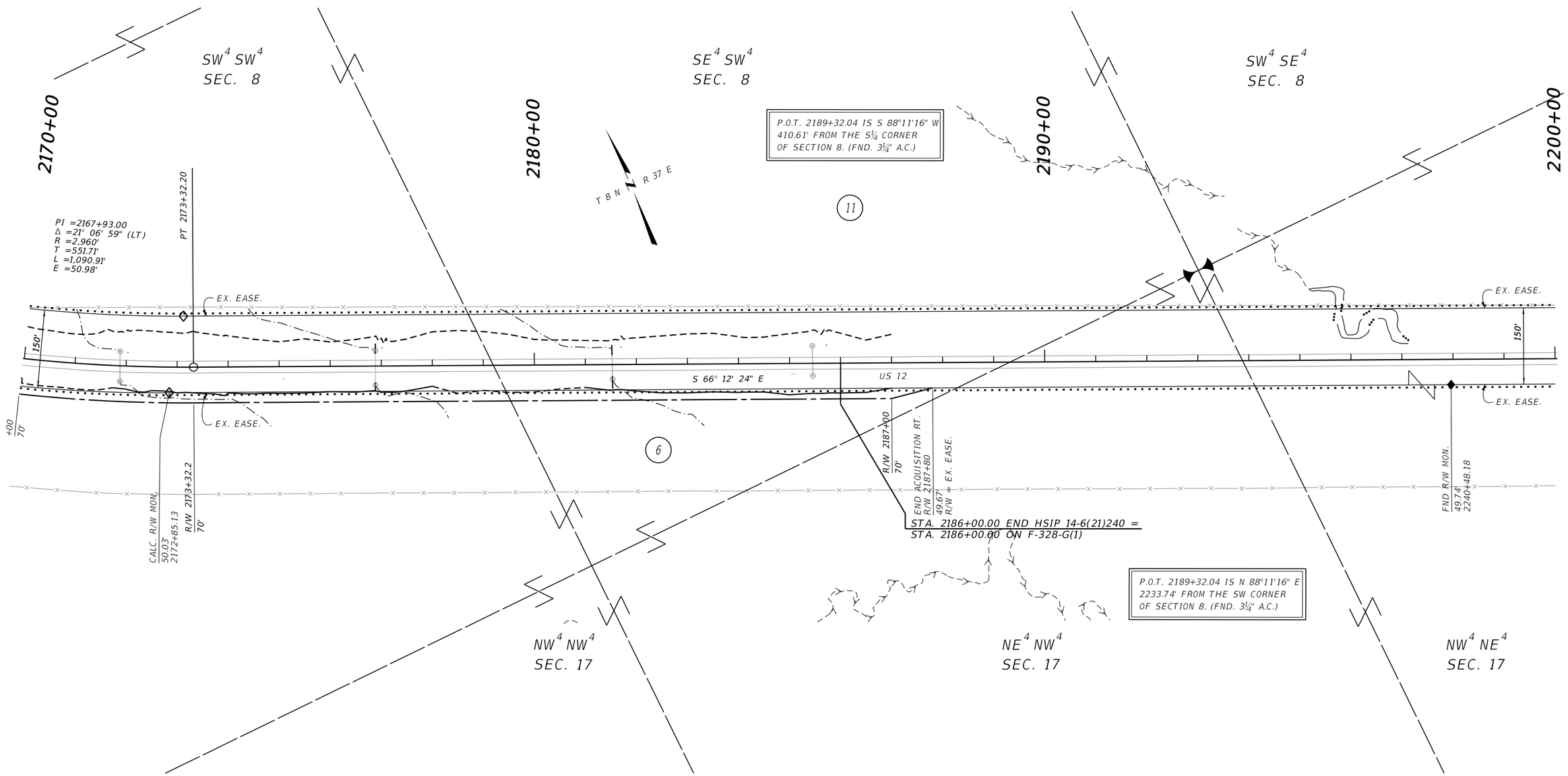

CONSTRUCTION LIMITS

CUT SECTION (TOP OF CUT)

TOE OF FILL

MAP REVISED

FHWA/MDT APPROVAL
08/18/21

3	MDT	MONTANA DEPARTMENT OF TRANSPORTATION
2		9/21/2021
1		2:07:19 PM CPS - U3193

C:\DGN\9083000ropln004.dgn

NOTES:

1. THE PROPOSED R/W LINE WHERE A SPIRAL CURVE TRANSITION IS USED IS A CHORD RATHER THAN A CONCENTRIC CURVE.
2. ALL STATIONS AND OFFSETS FOR R/W BREAKS ARE IN REFERENCE TO THE R/W BASELINE.

FOR EXISTING R/W RETRACEMENT, SEE CERTIFICATE OF SURVEY NO. 0121840.

GRID STATE PLANE COORDINATES

THIS IS A STATE PLANE COORDINATE PROJECT. ALL DIMENSIONS, DISTANCES AND AREAS ON THIS PROJECT ARE GRID, EXCEPT FOR THE EXISTING R/W WIDTH DIMENSION, WHICH IS RECORD.
THE COMBINATION SCALE FACTOR IS 0.99930177.

MONTANA DEPARTMENT OF TRANSPORTATION

RIGHT OF WAY PLAN

ROSEBUD COUNTY

SCALE 1"=100'

0 50' 100' 200' 300'