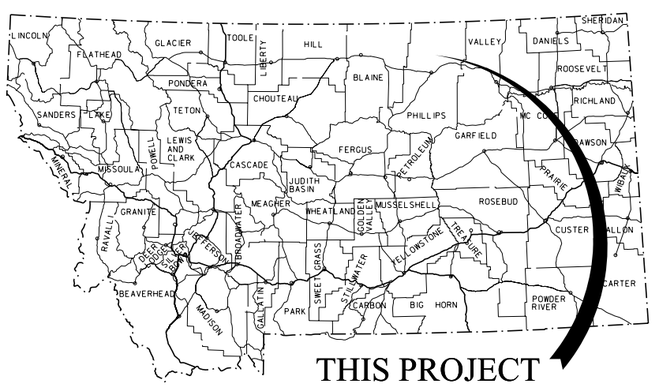

MONTANA DEPARTMENT OF TRANSPORTATION

STATE	RIGHT OF WAY	SHEET NO.	TOTAL SHEETS
MONTANA		1	24
R/W ID.	NH 99-1(10)7		
PROJECT NO.	4055-010		

11 KM N OF MALTA-NORTH

RIGHT OF WAY PLAN
FEDERAL AID PROJECT NH 99–1(10)7
11 KM N OF MALTA–NORTH

PHILLIPS COUNTY

LENGTH 11.5 MILES

SEE SHEET NO. 2 & 3 FOR OWNERSHIP NAMES, ADDRESSES, AREAS, ETC.

PLAN LEGEND

- PROPOSED RIGHT OF WAY LINE
- EXISTING RIGHT OF WAY LINE
- RAILROAD RIGHT OF WAY LINE
- RIGHT OF WAY BASELINE
- STK'D CENTERLINE
- SECTION LINE
- OWNERSHIP BOUNDARY
- FULL ACCESS CONTROL (AC)
- LIMITED ACCESS CONTROL
- EXISTING FULL ACCESS CONTROL (EFAC)
- EXISTING LIMITED ACCESS CONTROL (ELAC)
- PRESENT TRAVELED WAY (P.T.W.)
- FENCE LINE
- EXISTING GUARDRAIL
- PROPOSED GUARDRAIL
- GATE IN FENCE
- CATTLE GUARD: EXIST. - PROPOSED
- SECTION CORNER (FOUND / UNFOUND)
- ¼ SECTION CORNER
- CLOSING CORNER
- MEANDER CORNER
- CENTER OF SECTION
- 1/16 SECTION CORNER FOUND
- RIGHT OF WAY MONUMENT (FOUND / CALCULATED)
- PROPERTY CORNER PIN
- POWER POLE IN PLACE
- TELEPHONE POLE IN PLACE
- TELEGRAPH POLE IN PLACE
- LIGHT POLE
- PROPOSED CULVERT
- EXISTING CULVERT
- OUTLET DITCH
- INLET DITCH
- EXISTING DITCH
- CHANNEL CHANGES (CH. CH.)
- DITCH BLOCK
- RIPRAP
- BRIDGES
- RAILROADS
- PARCEL NUMBERS (2)
- APPROACH: EXIST.- PROPOSED

ASSOCIATED PROJECTS
NH 99-1(2)7 P.E.

RELATED PROJECTS
WPSO 337
S 337 (2)
S 337 (4)
S 337 (11)
STPS 242-1(8)0 F
ER 99-1(1)15

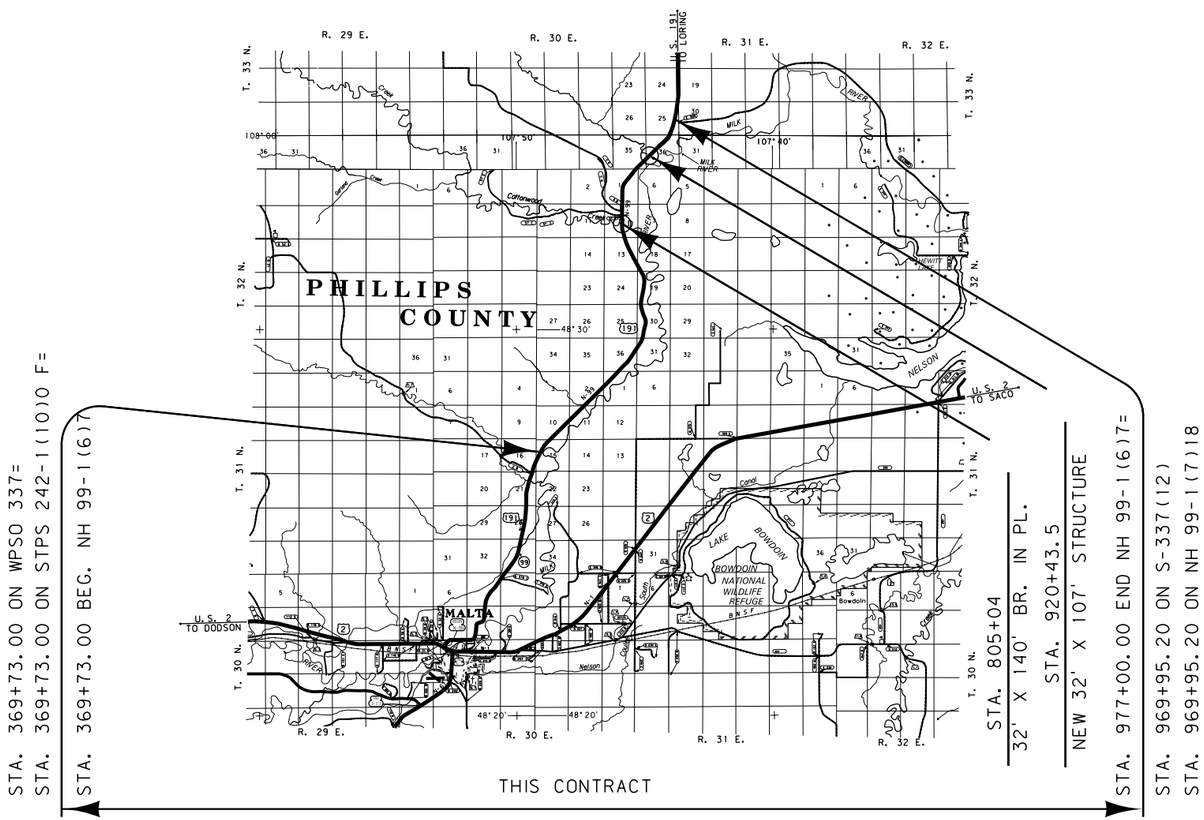

GRID STATE PLANE COORDINATES

THIS IS A STATE PLANE COORDINATE PROJECT. ALL DIMENSIONS, DISTANCES AND AREAS ON THIS PROJECT ARE GRID, EXCEPT FOR THE EXISTING R/W WIDTH DIMENSION, WHICH IS RECORD. THE COMBINATION SCALE FACTOR (CSF) VARIES DEPENDING ON LOCATION. THE CSF FROM THE BEGINNING OF THE PROJECT TO STATION 687+00 ± IS 0.99961636. FROM SAID LOCATION TO THE END OF THE PROJECT CSF 0.99965318 APPLIES.

FOR EXISTING R/W RETRACEMENT, SEE CERTIFICATE OF SURVEY NO. 418

CONSTRUCTION LIMITS
CUT SECTION (TOP OF CUT)
TRANSITION
TOE OF FILL
BACKSLOPE LIMITS INCLUDE ROUNDING

MAP REVISED

FHWA/MDT APPROVAL
10/25/13

MDT MONTANA DEPARTMENT OF TRANSPORTATION	C:\DGN\4055rottlf01.dgn
	6/5/2017
	12:15:10 PM CPS - U0460

STATE	RIGHT OF WAY	SHEET NO.	TOTAL SHEETS
MONTANA		2	24
R/W ID.	NH 99-1(10)7		
PROJECT NO.	4055-010		

11 KM N OF MALTA-NORTH

OWNERSHIP

PARCEL	NAME	ADDRESS	TOTAL AREA	GROSS R/W AREA	EX. EASE. AREA	NET AREA	REMAINDER LEFT	REMAINDER RIGHT	CONST. PMT. AREA	EASEMENT AREA	SHEET NO.
1	CARROLL COMPANIES, INC.	PO BOX 1549, BOONE, NC 28607	160.00+ AC	34.75 AC	12.84 AC	21.91 AC				0.04 AC	4-8
2	USDI BUREAU OF LAND MANAGEMENT	5001 SOUTHGATE DRIVE, BILLINGS, MT 59101	160.00+ AC	OWNER NOTIFICATION ONLY							8,9
3	KATHLEEN A. TENNISON, ETAL, ALLOTMENT 1515	PO BOX 60, BELCOURT, ND 58316-0060	150.78 AC	FOR NEGOTIATIONS ONLY							9,10
4	STATE OF MONTANA, DNRC	1625 11th AVE. HELENA, MT 59620	160.00+ AC	23.76 AC	20.55 AC	3.21 AC			0.65 AC		9-12
5	CARROLL COMPANIES, INC.	PO BOX 1549, BOONE, NC 28607	160.00+ AC	2.95 AC		2.95 AC			0.18 AC		11-14
6	CARROLL COMPANIES, INC.	PO BOX 1549, BOONE, NC 28607		1.83 AC		1.83 AC					11,12
7	USDI BUREAU OF LAND MANAGEMENT	5001 SOUTHGATE DRIVE, BILLINGS, MT 59101	160.00+ AC	11.88 AC	9.82 AC	2.06 AC					12-15
8	CARROLL COMPANIES, INC.	PO BOX 1549, BOONE, NC 28607		5.98 AC		5.98 AC					12,13
1,5,6,8	COMBINATION PARCEL			45.51 AC	12.84 AC	32.67 AC			0.18 AC	0.04 AC	4-8,11-14
9	MCEWEN CATTLE CO., A MONTANA CORPORATION	PO BOX 538, MALTA, MT 59538		2.34 AC		2.34 AC					14,15
10	MCEWEN CATTLE CO., A MONTANA CORPORATION	PO BOX 538, MALTA, MT 59538		2.69 AC		2.69 AC					14,15
9,10	COMBINATION PARCEL			5.03 AC		5.03 AC					14,15
11	DALE CHRISTMAN AND CINDY CHRISTMAN	PO BOX 1352, MALTA, MT 59538		5.19 AC	2.22 AC	2.97 AC					15
12	WILLIAM J. MURDOCK, ETAL	PO BOX 1137, MALTA, MT 59538		3.33 AC	0.27 AC	3.06 AC					15,16
13	WILLIAM J. MURDOCK, ETAL	PO BOX 1137, MALTA, MT 59538		2.67 AC		2.67 AC					15-19
14	STERLING C. CARROLL AND LOIS E. CARROLL	PO BOX 1549, BOONE, NC 28607	160.00+ AC	2.83 AC	0.60 AC	2.23 AC					16-18
14CE	USDI- U.S. FISH AND WILDLIFE SERVICE	PO BOX 110, LEWISTOWN, MT 59457-0110	160.00+ AC	2.83 AC	0.60 AC	2.23 AC					16-18
15	STERLING C. CARROLL AND LOIS E. CARROLL	PO BOX 1549, BOONE, NC 28607	35.00 AC	0.76 AC		0.76 AC					17
15CE	USDI- U.S. FISH AND WILDLIFE SERVICE	PO BOX 110, LEWISTOWN, MT 59457-0110	35.00 AC	0.76 AC		0.76 AC					17
16	WILLIAM J. MURDOCK, ETAL	PO BOX 1137, MALTA, MT 59538		0.15 AC	0.08 AC	0.07 AC					17
17	STERLING C. CARROLL AND LOIS E. CARROLL	PO BOX 1549, BOONE, NC 28607		0.59 AC		0.59 AC					18
17CE	USDI- U.S. FISH AND WILDLIFE SERVICE	PO BOX 110, LEWISTOWN, MT 59457-0110		0.59 AC		0.59 AC					18
14,15,17	COMBINATION PARCEL			4.18 AC	0.60 AC	3.58 AC					16-18
14CE15CE17CE	COMBINATION PARCEL			4.18 AC	0.60 AC	3.58 AC					16-18
18	WILLIAM J. MURDOCK, ETAL	PO BOX 1137, MALTA, MT 59538		0.01 AC		0.01 AC					18,19
12,13,16,18	COMBINATION PARCEL			6.16 AC	0.35 AC	5.81 AC					15-19
19	B & J LIVESTOCK, INC., A MONTANA CORPORATION	PO BOX 36, HINSDALE, MT 59241	160.00+ AC	7.31 AC		7.31 AC					18-21
20	B & J LIVESTOCK, INC., A MONTANA CORPORATION	PO BOX 36, HINSDALE, MT 59241		1.06 AC	0.06 AC	1.00 AC					19,20
21	MONTANA DEPARTMENT OF TRANSPORTATION	PO BOX 201001, HELENA, MT 59260	4.0129 AC	0.27 AC		0.27 AC		3.7429 AC			20,21
22	MDH RANCH, INC., A MONTANA CORPORATION	4268 N FRENCHMAN RD, WHITEWATER, MT 59544		1.82 AC		1.82 AC					20-22
23	MDH RANCH, INC., A MONTANA CORPORATION	4268 N FRENCHMAN RD, WHITEWATER, MT 59544		0.27 AC		0.27 AC					21
24	B & J LIVESTOCK, INC., A MONTANA COR	PO BOX 36, HINSDALE, MT 59241		0.74 AC		0.74 AC					21
19,20,24	COMBINATION PARCEL			9.11 AC	0.06 AC	9.05 AC					18-21
25	MDH RANCH, INC., A MONTANA CORPORATION	4268 N FRENCHMAN RD, WHITEWATER, MT 59544	160.00+ AC	0.73 AC		0.73 AC					21
22,23,25	COMBINATION PARCEL										
26	STATE OF MONTANA, DNRC	1625 11th AVE. HELENA, MT 59620	160.00+ AC	34.00 AC	20.73 AC	13.27 AC					21-24
4, 26	COMBINATION PARCEL			57.76 AC	41.28 AC	16.48 AC			0.65 AC		9-12,21-24

RIGHT-OF-WAY COORDINATE ASCII FILES

R/W BREAK COORDS: 4055ROBRK001.TXT
R/W BASELINE COORDS: 4055ROBAS001.TXT
ALL FILES ARE LOCATED ON THE CADD SERVER IN THE RO DIRECTORY, UNDER PROJECT: 4055

CONSTRUCTION LIMITS
CUT SECTION (TOP OF CUT)
TRANSITION
TOE OF FILL
BACKSLOPE LIMITS INCLUDE ROUNDING

MAP REVISED 3/10/14, 3/24/14 5/16/14 10/24/14

FHWA/MDT APPROVAL 10/25/13

3
2
1

MDT MONTANA DEPARTMENT OF TRANSPORTATION

C:\DGN\4055roownf01.dgn
6/5/2017
12:15:16 PM CPS - U0460

NOTES:
1. THE PROPOSED R/W LINE WHERE A SPIRAL CURVE TRANSITION IS USED IS A CHORD RATHER THAN A CONCENTRIC CURVE.
2. ALL STATIONS AND OFFSETS FOR R/W BREAKS ARE IN REFERENCE TO THE R/W BASELINE.

GRID STATE PLANE COORDINATES

THIS IS A STATE PLANE COORDINATE PROJECT. ALL DIMENSIONS, DISTANCES AND AREAS ON THIS PROJECT ARE GRID, EXCEPT FOR THE EXISTING R/W WIDTH DIMENSION, WHICH IS RECORD. THE COMBINATION SCALE FACTOR (CSF) VARIES DEPENDING ON LOCATION. THE CSF FROM THE BEGINNING OF THE PROJECT TO STATION 687+00 ± IS 0.99961636. FROM SAID LOCATION TO THE END OF THE PROJECT CSF 0.99965318 APPLIES.

MONTANA DEPARTMENT OF TRANSPORTATION
RIGHT OF WAY PLAN
PHILLIPS COUNTY

STATE	RIGHT OF WAY	SHEET NO.	TOTAL SHEETS
MONTANA		3	24
R/W ID.		NH 99-1(10)7	
PROJECT NO.		4055-010	

11 KM N OF MALTA-NORTH

OWNERSHIP

PARCEL	NAME	ADDRESS	TOTAL AREA	GROSS R/W AREA	EX. EASE. AREA	NET AREA	REMAINDER		CONST. PMT. AREA	EASEMENT AREA	SHEET NO.
							LEFT	RIGHT			
27	USDI BUREAU OF LAND MANAGEMENT	5001 SOUTHGATE DR, BILLINGS, MT 59101	160+ AC	7.21 AC	6.30 AC	0.91 AC					24
2,7,27	COMBINATION PARCEL			19.09 AC	16.12 AC	2.97 AC					8,9,12-15,24

RIGHT-OF-WAY COORDINATE ASCII FILES

R/W BREAK COORDS: 4055ROBRK001.TXT
R/W BASELINE COORDS: 4055ROBAS001.TXT
ALL FILES ARE LOCATED ON THE CADD SERVER IN THE RO DIRECTORY, UNDER PROJECT: 4055

CONSTRUCTION LIMITS
CUT SECTION (TOP OF CUT)
TRANSITION
TOE OF FILL
BACKSLOPE LIMITS INCLUDE ROUNDING

MAP REVISED

FHWA/MDT APPROVAL
10/25/13

3
2
1

MDT MONTANA DEPARTMENT OF TRANSPORTATION

C:\DGN\4055roownf01.dgn
6/5/2017
12:15:18 PM CPS - U0460

NOTES:
1. THE PROPOSED R/W LINE WHERE A SPIRAL CURVE TRANSITION IS USED IS A CHORD RATHER THAN A CONCENTRIC CURVE.
2. ALL STATIONS AND OFFSETS FOR R/W BREAKS ARE IN REFERENCE TO THE R/W BASELINE.

GRID STATE PLANE COORDINATES

THIS IS A STATE PLANE COORDINATE PROJECT. ALL DIMENSIONS, DISTANCES AND AREAS ON THIS PROJECT ARE GRID, EXCEPT FOR THE EXISTING R/W WIDTH DIMENSION, WHICH IS RECORD. THE COMBINATION SCALE FACTOR (CSF) VARIES DEPENDING ON LOCATION. THE CSF FROM THE BEGINNING OF THE PROJECT TO STATION 687+00 ± IS 0.99961636. FROM SAID LOCATION TO THE END OF THE PROJECT CSF 0.99965318 APPLIES.

MONTANA DEPARTMENT OF TRANSPORTATION
RIGHT OF WAY PLAN
PHILLIPS COUNTY

STATE	RIGHT OF WAY	SHEET NO.	TOTAL SHEETS
MONTANA		4	24
R/W ID.	NH 99-1(10)7		
PROJECT NO.	4055-010		

11 KM N OF MALTA-NORTH

SEE SHEET NO. 2 & 3 FOR OWNERSHIP NAMES, ADDRESSES, AREAS, ETC.

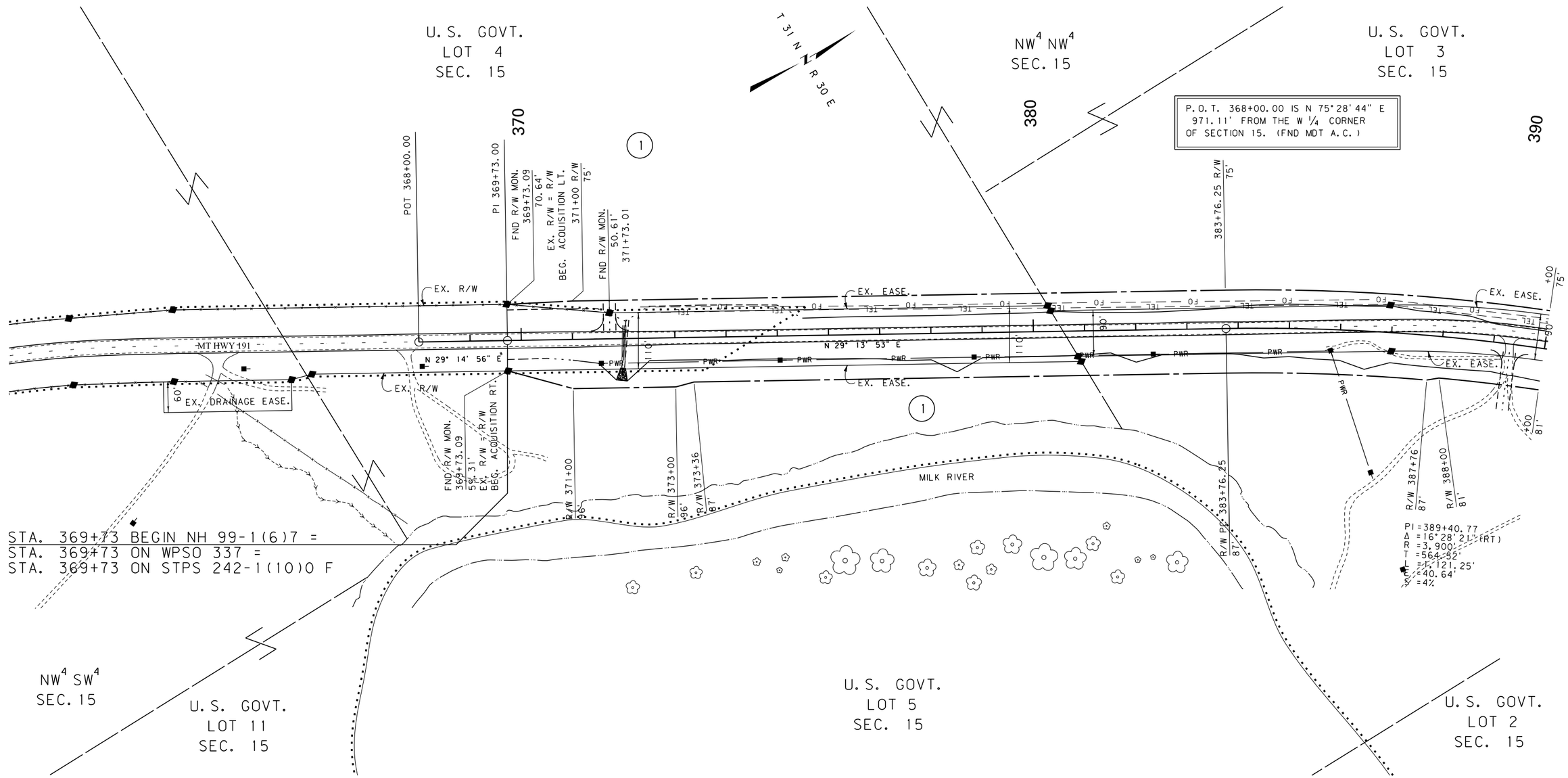

CONSTRUCTION LIMITS	MAP REVISED
CUT SECTION (TOP OF CUT)	
TRANSITION	
TOE OF FILL	
BACKSLOPE LIMITS INCLUDE ROUNDING	FHWA/MDT APPROVAL 10/25/13

3	MDT MONTANA DEPARTMENT OF TRANSPORTATION	C:\DGN\4055ropInf01.dgn
2		6/5/2017
1		12:15:28 PM CPS - U0460

FOR EXISTING R/W
RETRACEMENT, SEE
CERTIFICATE OF SURVEY NO. 418

NOTES:
1. THE PROPOSED R/W LINE WHERE A SPIRAL CURVE TRANSITION IS USED IS A CHORD RATHER THAN A CONCENTRIC CURVE.
2. ALL STATIONS AND OFFSETS FOR R/W BREAKS ARE IN REFERENCE TO THE R/W BASELINE.

GRID STATE PLANE COORDINATES

THIS IS A STATE PLANE COORDINATE PROJECT. ALL DIMENSIONS, DISTANCES AND AREAS ON THIS PROJECT ARE GRID, EXCEPT FOR THE EXISTING R/W WIDTH DIMENSION, WHICH IS RECORD.
THE COMBINATION SCALE FACTOR IS 0.99961636

MONTANA DEPARTMENT OF TRANSPORTATION

RIGHT OF WAY PLAN

PHILLIPS COUNTY

SCALE 1" = 100'

0 50' 100' 200' 300'

STATE	RIGHT OF WAY	SHEET NO.	TOTAL SHEETS
MONTANA		5	24
R/W ID.	NH 99-1(10)7		
PROJECT NO.	4055-010		

11 KM N OF MALTA-NORTH

SEE SHEET NO. 2 & 3 FOR OWNERSHIP NAMES, ADDRESSES, AREAS, ETC.

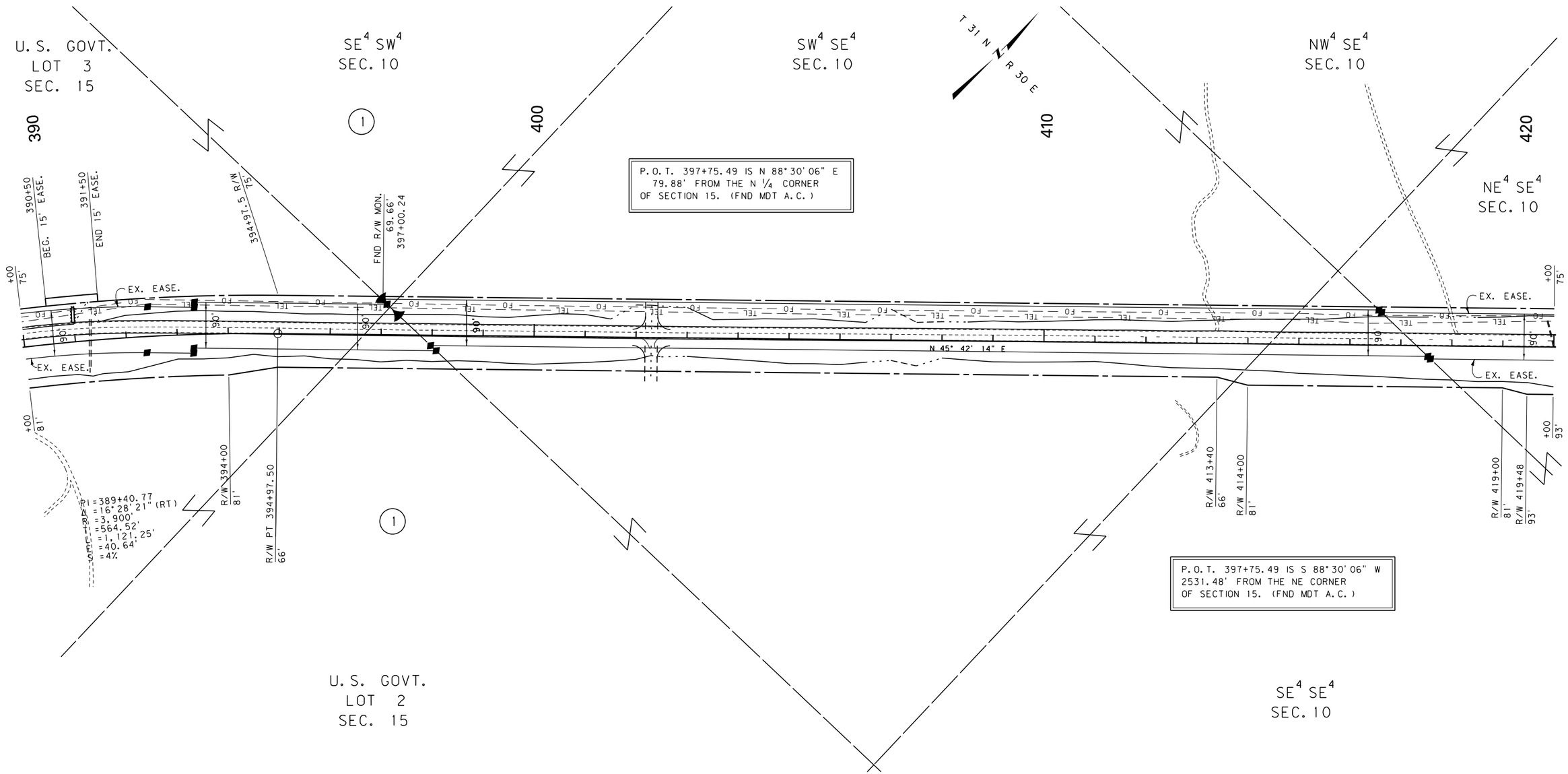

FOR EXISTING R/W
RETRACEMENT, SEE
CERTIFICATE OF SURVEY NO. 418

GRID STATE PLANE COORDINATES

THIS IS A STATE PLANE COORDINATE PROJECT. ALL DIMENSIONS, DISTANCES AND AREAS ON THIS PROJECT ARE GRID, EXCEPT FOR THE EXISTING R/W WIDTH DIMENSION, WHICH IS RECORD.
THE COMBINATION SCALE FACTOR IS 0.99961636

NOTES:
1. THE PROPOSED R/W LINE WHERE A SPIRAL CURVE TRANSITION IS USED IS A CHORD RATHER THAN A CONCENTRIC CURVE.
2. ALL STATIONS AND OFFSETS FOR R/W BREAKS ARE IN REFERENCE TO THE R/W BASELINE.

CONSTRUCTION LIMITS	MAP REVISED 3/10/14
CUT SECTION (TOP OF CUT)	
TRANSITION	
TOE OF FILL	
BACKSLOPE LIMITS INCLUDE ROUNDING	FHWA/MDT APPROVAL 10/25/13

3	MDT MONTANA DEPARTMENT OF TRANSPORTATION	C:\DGN\4055ropInf01.dgn
2		6/5/2017
1		12:15:31 PM CPS - U0460

MONTANA DEPARTMENT OF TRANSPORTATION

RIGHT OF WAY PLAN

PHILLIPS COUNTY

SCALE 1" = 100'

0 50' 100' 200' 300'

STATE	RIGHT OF WAY	SHEET NO.	TOTAL SHEETS
MONTANA		6	24
R/W ID.		NH 99-1(10)7	
PROJECT NO.		4055-010	

11 KM N OF MALTA-NORTH

SEE SHEET NO. 2 & 3 FOR OWNERSHIP NAMES, ADDRESSES, AREAS, ETC.

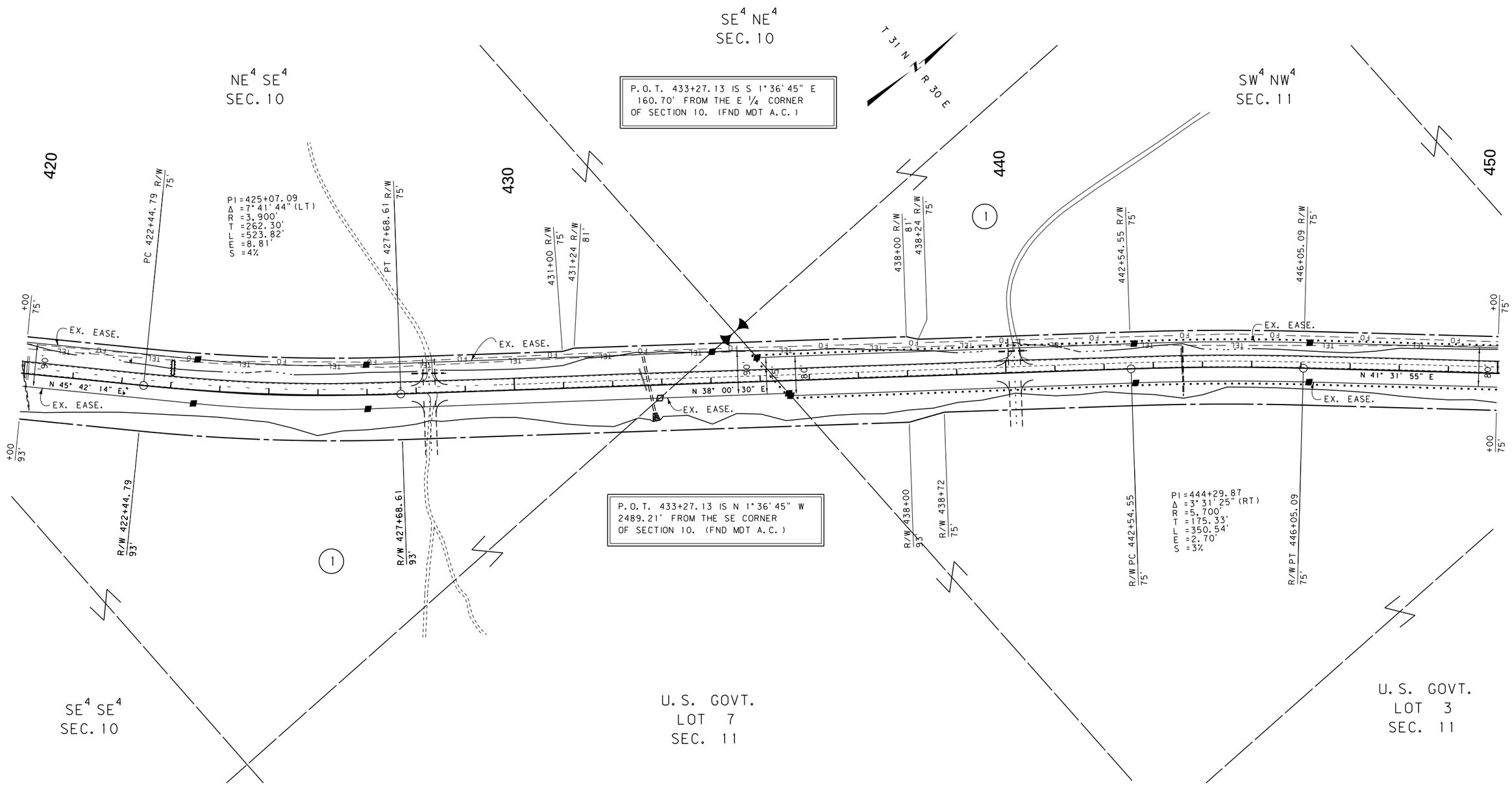

FOR EXISTING R/W
RETRACEMENT, SEE
CERTIFICATE OF SURVEY NO. 418

GRID STATE PLANE COORDINATES

THIS IS A STATE PLANE COORDINATE PROJECT. ALL DIMENSIONS, DISTANCES AND AREAS ON THIS PROJECT ARE GRID, EXCEPT FOR THE EXISTING R/W WIDTH DIMENSION, WHICH IS RECORD.
THE COMBINATION SCALE FACTOR IS 0.99961636

NOTES:
1. THE PROPOSED R/W LINE WHERE A SPIRAL CURVE TRANSITION IS USED IS A CHORD RATHER THAN A CONCENTRIC CURVE.
2. ALL STATIONS AND OFFSETS FOR R/W BREAKS ARE IN REFERENCE TO THE R/W BASELINE.

CONSTRUCTION LIMITS	MAP REVISED
CUT SECTION (TOP OF CUT)	
TRANSITION	
TOE OF FILL	
BACKSLOPE LIMITS INCLUDE ROUNDING	FHWA/MDT APPROVAL 10/25/13

3	MDT MONTANA DEPARTMENT OF TRANSPORTATION	C:\DGN\4055ropInf01.dgn
2		6/5/2017
1		12:15:35 PM CPS - U0460

MONTANA DEPARTMENT OF TRANSPORTATION

RIGHT OF WAY PLAN

PHILLIPS COUNTY

SCALE 1" = 100'

0 50' 100' 200' 300'

STATE	RIGHT OF WAY	SHEET NO.	TOTAL SHEETS
MONTANA		7	24
R/W ID.		NH 99-1(10)7	
PROJECT NO.		4055-010	

11 KM N OF MALTA-NORTH

SEE SHEET NO. 2 & 3 FOR OWNERSHIP NAMES, ADDRESSES, AREAS, ETC.

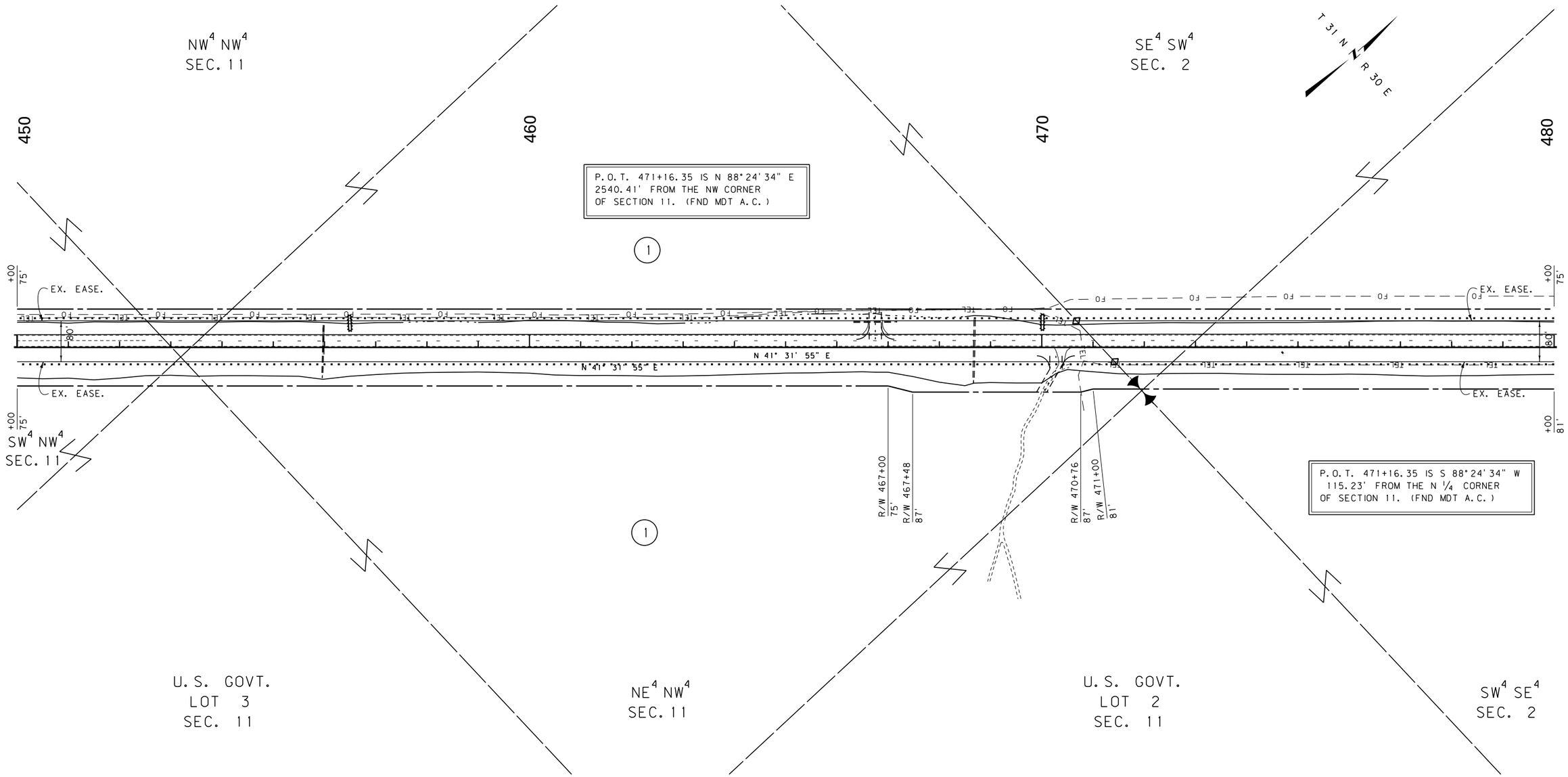

CONSTRUCTION LIMITS	MAP REVISED 3/10/14
CUT SECTION (TOP OF CUT)	
TRANSITION	
TOE OF FILL	
BACKSLOPE LIMITS INCLUDE ROUNDING	FHWA/MDT APPROVAL 10/25/13

3	MDT MONTANA DEPARTMENT OF TRANSPORTATION	C:\DGN\4055ropInf02.dgn	
2		6/5/2017	
1		12:15:43 PM	CPS - U0460

FOR EXISTING R/W
RETRACEMENT, SEE
CERTIFICATE OF SURVEY NO. 418

GRID STATE PLANE COORDINATES

THIS IS A STATE PLANE COORDINATE PROJECT. ALL DIMENSIONS, DISTANCES AND AREAS ON THIS PROJECT ARE GRID, EXCEPT FOR THE EXISTING R/W WIDTH DIMENSION, WHICH IS RECORD.
THE COMBINATION SCALE FACTOR IS 0.99961636

NOTES:
1. THE PROPOSED R/W LINE WHERE A SPIRAL CURVE TRANSITION IS USED IS A CHORD RATHER THAN A CONCENTRIC CURVE.
2. ALL STATIONS AND OFFSETS FOR R/W BREAKS ARE IN REFERENCE TO THE R/W BASELINE.

MONTANA DEPARTMENT OF TRANSPORTATION

RIGHT OF WAY PLAN

PHILLIPS COUNTY

SCALE 1" = 100'

0 50' 100' 200' 300'

STATE	RIGHT OF WAY	SHEET NO.	TOTAL SHEETS
MONTANA		8	24
R/W ID.		NH 99-1(10)7	
PROJECT NO.		4055-010	

11 KM N OF MALTA-NORTH

SEE SHEET NO. 2 & 3 FOR OWNERSHIP NAMES, ADDRESSES, AREAS, ETC.

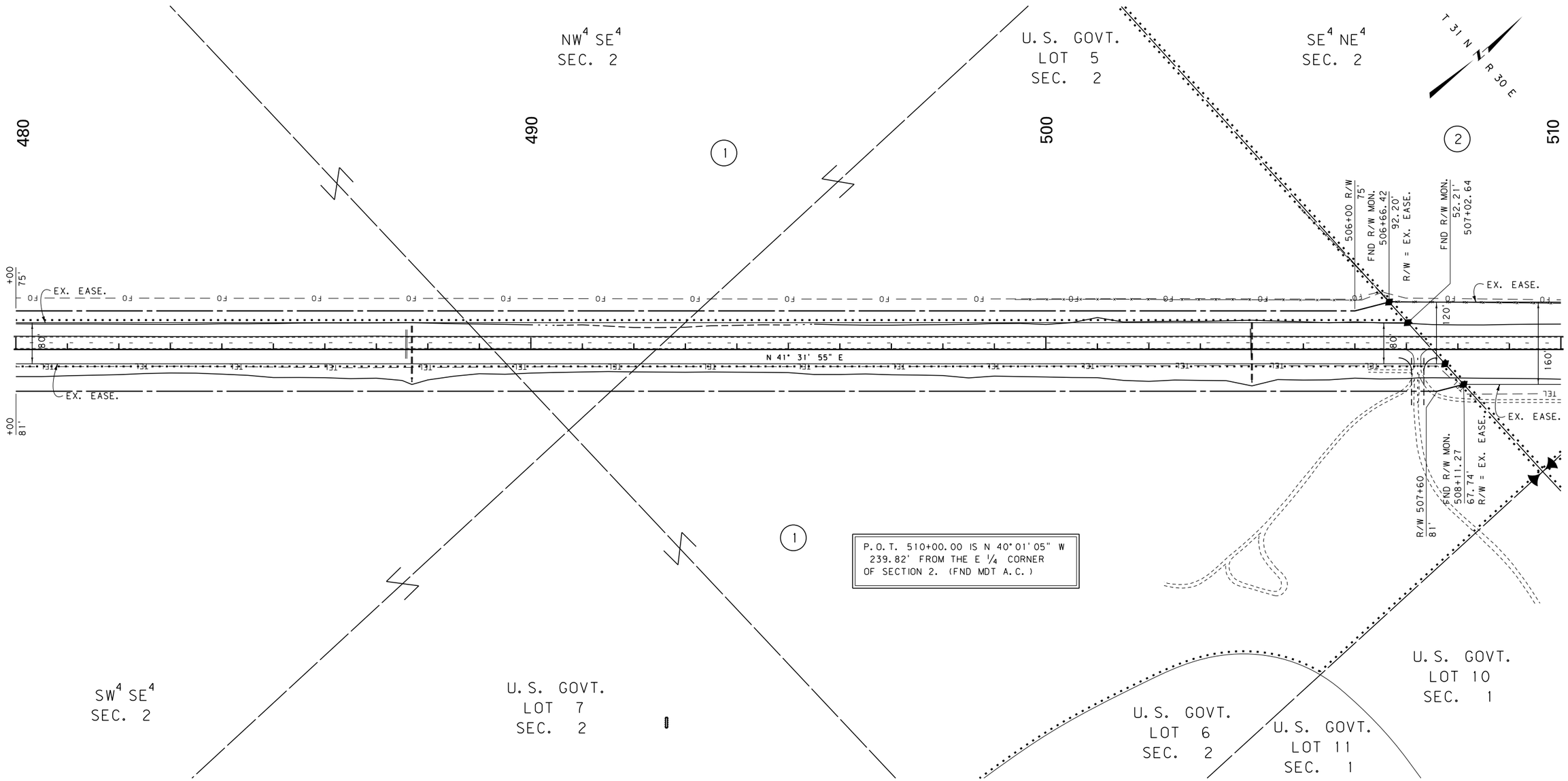

FOR EXISTING R/W
RETRACEMENT, SEE
CERTIFICATE OF SURVEY NO. 418

GRID STATE PLANE COORDINATES

THIS IS A STATE PLANE COORDINATE PROJECT. ALL DIMENSIONS, DISTANCES AND AREAS ON THIS PROJECT ARE GRID, EXCEPT FOR THE EXISTING R/W WIDTH DIMENSION, WHICH IS RECORD.
THE COMBINATION SCALE FACTOR IS 0.99961636

NOTES:
1. THE PROPOSED R/W LINE WHERE A SPIRAL CURVE TRANSITION IS USED IS A CHORD RATHER THAN A CONCENTRIC CURVE.
2. ALL STATIONS AND OFFSETS FOR R/W BREAKS ARE IN REFERENCE TO THE R/W BASELINE.

CONSTRUCTION LIMITS
CUT SECTION (TOP OF CUT)
TRANSITION
TOE OF FILL
BACKSLOPE LIMITS INCLUDE ROUNDING

MAP REVISED

FHWA/MDT APPROVAL
10/25/13

3
2
1

MDT MONTANA DEPARTMENT OF TRANSPORTATION

C:\DGN\4055ropInf02.dgn
6/5/2017
12:15:46 PM CPS-U0460

MONTANA DEPARTMENT OF TRANSPORTATION
RIGHT OF WAY PLAN
PHILLIPS COUNTY
SCALE 1"=100'
0 50' 100' 200' 300'

STATE	RIGHT OF WAY	SHEET NO.	TOTAL SHEETS
MONTANA		9	24
R/W ID.	NH 99-1(10)7		
PROJECT NO.	4055-010		

11 KM N OF MALTA-NORTH

SEE SHEET NO. 2 & 3 FOR OWNERSHIP NAMES, ADDRESSES, AREAS, ETC.

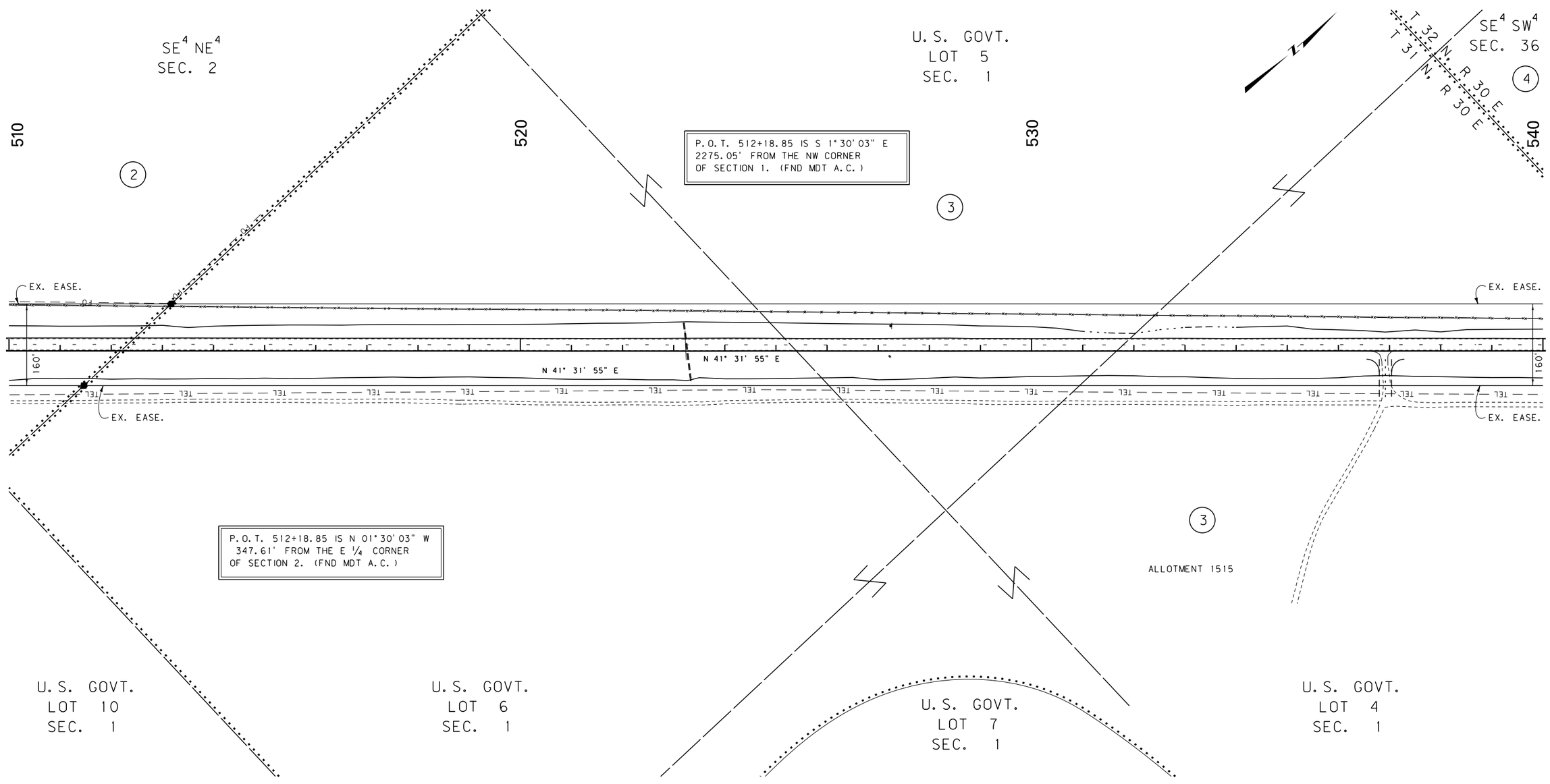

FOR EXISTING R/W
RETRACEMENT, SEE
CERTIFICATE OF SURVEY NO. 418

GRID STATE PLANE COORDINATES

THIS IS A STATE PLANE COORDINATE PROJECT. ALL DIMENSIONS, DISTANCES AND AREAS ON THIS PROJECT ARE GRID, EXCEPT FOR THE EXISTING R/W WIDTH DIMENSION, WHICH IS RECORD.
THE COMBINATION SCALE FACTOR IS 0.99961636

NOTES:
1. THE PROPOSED R/W LINE WHERE A SPIRAL CURVE TRANSITION IS USED IS A CHORD RATHER THAN A CONCENTRIC CURVE.
2. ALL STATIONS AND OFFSETS FOR R/W BREAKS ARE IN REFERENCE TO THE R/W BASELINE.

CONSTRUCTION LIMITS
CUT SECTION (TOP OF CUT)
TRANSITION
TOE OF FILL
BACKSLOPE LIMITS INCLUDE ROUNDING

MAP REVISED

FHWA/MDT APPROVAL
10/25/13

3	MDT MONTANA DEPARTMENT OF TRANSPORTATION	C:\DGN\4055ropInf02.dgn
2		6/5/2017
1		12:15:50 PM CPS - U0460

MONTANA DEPARTMENT OF TRANSPORTATION
RIGHT OF WAY PLAN
PHILLIPS COUNTY
SCALE 1" = 100'
0 50' 100' 200' 300'

STATE	RIGHT OF WAY	SHEET NO.	TOTAL SHEETS
MONTANA		10	24
R/W ID.		NH 99-1(10)7	
PROJECT NO.		4055-010	

11 KM N OF MALTA-NORTH

SEE SHEET NO. 2 & 3 FOR OWNERSHIP NAMES, ADDRESSES, AREAS, ETC.

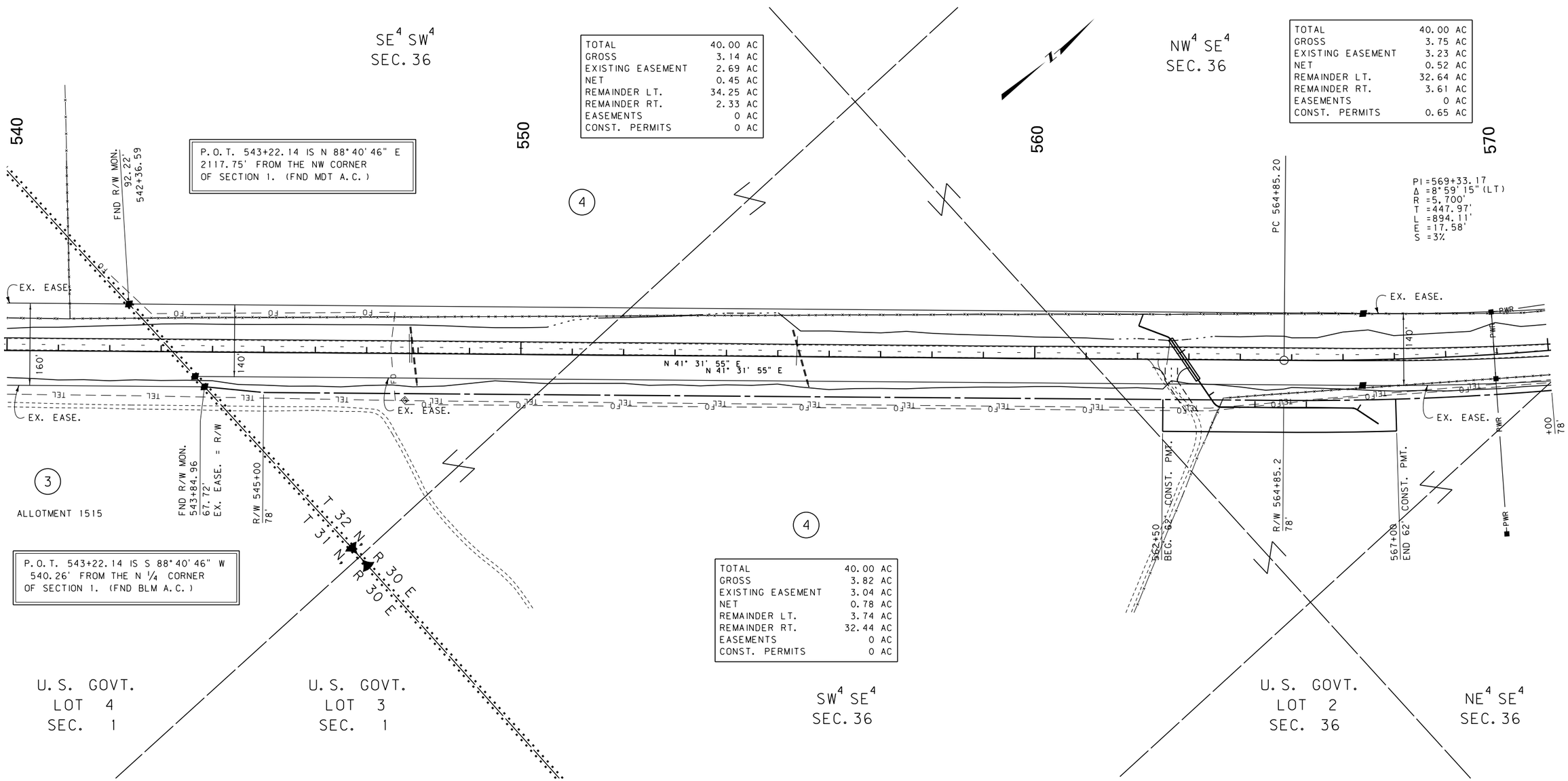

TOTAL	40.00 AC
GROSS	3.14 AC
EXISTING EASEMENT	2.69 AC
NET	0.45 AC
REMAINDER LT.	34.25 AC
REMAINDER RT.	2.33 AC
EASEMENTS	0 AC
CONST. PERMITS	0 AC

TOTAL	40.00 AC
GROSS	3.75 AC
EXISTING EASEMENT	3.23 AC
NET	0.52 AC
REMAINDER LT.	32.64 AC
REMAINDER RT.	3.61 AC
EASEMENTS	0 AC
CONST. PERMITS	0.65 AC

TOTAL	40.00 AC
GROSS	3.82 AC
EXISTING EASEMENT	3.04 AC
NET	0.78 AC
REMAINDER LT.	3.74 AC
REMAINDER RT.	32.44 AC
EASEMENTS	0 AC
CONST. PERMITS	0 AC

CONSTRUCTION LIMITS	MAP REVISED 3/10/14
CUT SECTION (TOP OF CUT)	
TRANSITION	
TOE OF FILL	
BACKSLOPE LIMITS INCLUDE ROUNDING	FHWA/MDT APPROVAL 10/25/13

3	MDT MONTANA DEPARTMENT OF TRANSPORTATION	C:\DGN\4055ropInf03.dgn
2		6/5/2017
1		12:16:01 PM CPS-U0460

FOR EXISTING R/W
RETRACEMENT, SEE
CERTIFICATE OF SURVEY NO. 418

NOTES:
1. THE PROPOSED R/W LINE WHERE A SPIRAL CURVE TRANSITION IS USED IS A CHORD RATHER THAN A CONCENTRIC CURVE.
2. ALL STATIONS AND OFFSETS FOR R/W BREAKS ARE IN REFERENCE TO THE R/W BASELINE.

GRID STATE PLANE COORDINATES

THIS IS A STATE PLANE COORDINATE PROJECT. ALL DIMENSIONS, DISTANCES AND AREAS ON THIS PROJECT ARE GRID, EXCEPT FOR THE EXISTING R/W WIDTH DIMENSION, WHICH IS RECORD.
THE COMBINATION SCALE FACTOR IS 0.99961636

MONTANA DEPARTMENT OF TRANSPORTATION

RIGHT OF WAY PLAN

PHILLIPS COUNTY

SCALE 1"=100'

0 50' 100' 200' 300'

STATE	RIGHT OF WAY	SHEET NO.	TOTAL SHEETS
MONTANA		11	24
R/W ID.	NH 99-1(10)7		
PROJECT NO.	4055-010		

11 KM N OF MALTA-NORTH

SEE SHEET NO. 2 & 3 FOR OWNERSHIP NAMES, ADDRESSES, AREAS, ETC.

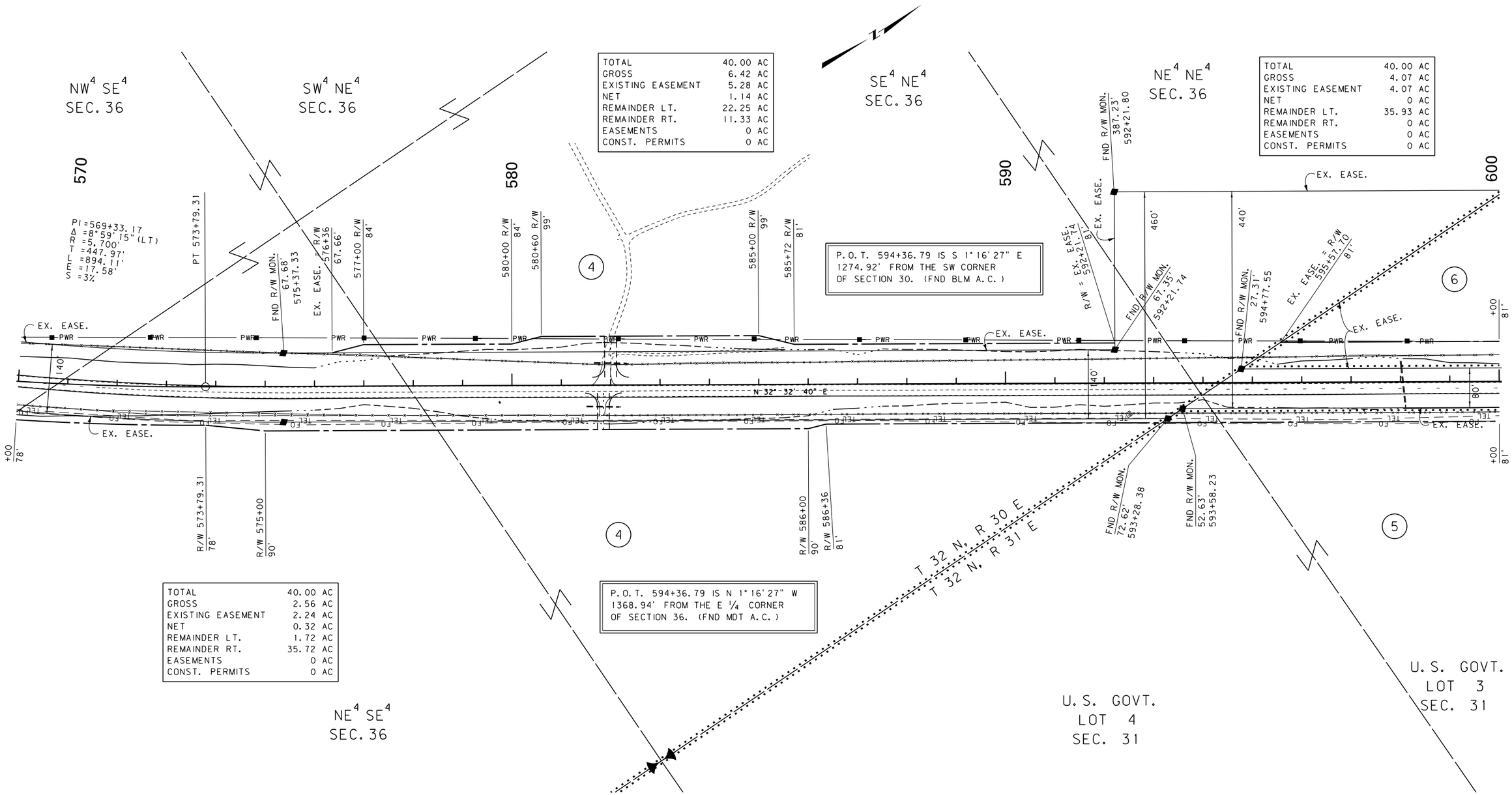

TOTAL	40.00 AC
GROSS	6.42 AC
EXISTING EASEMENT	5.28 AC
NET	1.14 AC
REMAINDER LT.	22.25 AC
REMAINDER RT.	11.33 AC
EASEMENTS	0 AC
CONST. PERMITS	0 AC

P.O.T. 594+36.79 IS S 1°16'27" E 1274.92' FROM THE SW CORNER OF SECTION 30. (FND BLM A.C.)

TOTAL	40.00 AC
GROSS	4.07 AC
EXISTING EASEMENT	4.07 AC
NET	0 AC
REMAINDER LT.	35.93 AC
REMAINDER RT.	0 AC
EASEMENTS	0 AC
CONST. PERMITS	0 AC

P.O.T. 594+36.79 IS N 1°16'27" W 1368.94' FROM THE E 1/4 CORNER OF SECTION 36. (FND MDT A.C.)

TOTAL	40.00 AC
GROSS	2.56 AC
EXISTING EASEMENT	2.24 AC
NET	0.32 AC
REMAINDER LT.	1.72 AC
REMAINDER RT.	35.72 AC
EASEMENTS	0 AC
CONST. PERMITS	0 AC

FOR EXISTING R/W RETRACEMENT, SEE CERTIFICATE OF SURVEY NO. 418

GRID STATE PLANE COORDINATES

THIS IS A STATE PLANE COORDINATE PROJECT. ALL DIMENSIONS, DISTANCES AND AREAS ON THIS PROJECT ARE GRID, EXCEPT FOR THE EXISTING R/W WIDTH DIMENSION, WHICH IS RECORD.
THE COMBINATION SCALE FACTOR IS 0.99961636

NOTES:
1. THE PROPOSED R/W LINE WHERE A SPIRAL CURVE TRANSITION IS USED IS A CHORD RATHER THAN A CONCENTRIC CURVE.
2. ALL STATIONS AND OFFSETS FOR R/W BREAKS ARE IN REFERENCE TO THE R/W BASELINE.

CONSTRUCTION LIMITS
CUT SECTION (TOP OF CUT)
TRANSITION
TOE OF FILL
BACKSLOPE LIMITS INCLUDE ROUNDING

MAP REVISED

FHWA/MDT APPROVAL
10/25/13

3
2
1

MDT MONTANA DEPARTMENT OF TRANSPORTATION

C:\DGN\4055ropInf03.dgn
6/5/2017
12:16:05 PM CPS - U0460

MONTANA DEPARTMENT OF TRANSPORTATION
RIGHT OF WAY PLAN
PHILLIPS COUNTY
SCALE 1" = 100'
0 50' 100' 200' 300'

STATE	RIGHT OF WAY	SHEET NO.	TOTAL SHEETS
MONTANA		12	24
R/W ID.		NH 99-1(10)7	
PROJECT NO.		4055-010	

11 KM N OF MALTA-NORTH

SEE SHEET NO. 2 & 3 FOR OWNERSHIP NAMES, ADDRESSES, AREAS, ETC.

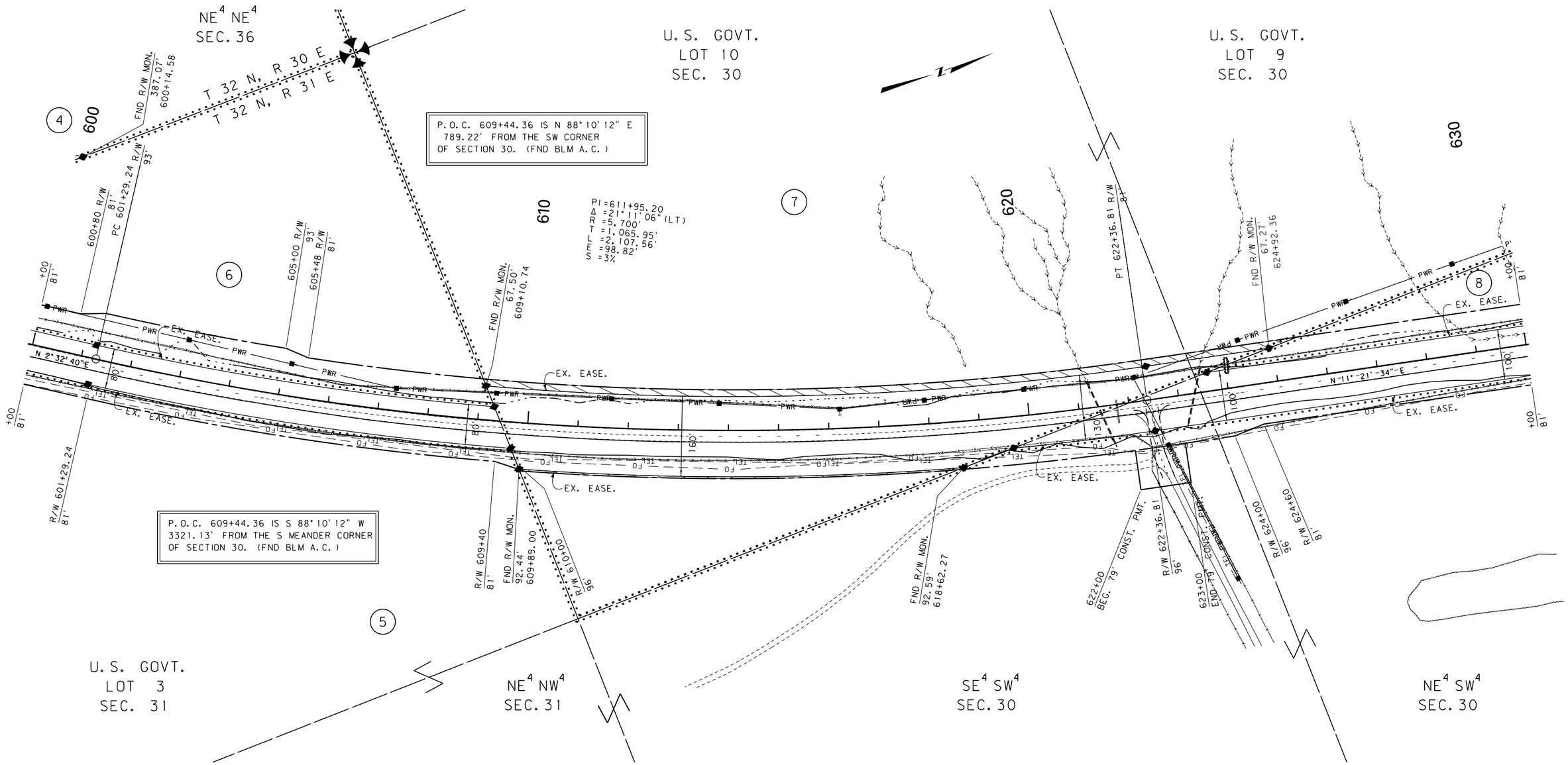

CONSTRUCTION LIMITS	MAP REVISED
CUT SECTION (TOP OF CUT)	
TRANSITION	
TOE OF FILL	
BACKSLOPE LIMITS INCLUDE ROUNDING	FHWA/MDT APPROVAL 10/25/13

3	MDT MONTANA DEPARTMENT OF TRANSPORTATION	C:\DGN\4055ropInf03.dgn
2		6/5/2017
1		12:16:08 PM CPS - U0460

FOR EXISTING R/W
RETRACEMENT, SEE
CERTIFICATE OF SURVEY NO. 418

GRID STATE PLANE COORDINATES

THIS IS A STATE PLANE COORDINATE PROJECT. ALL DIMENSIONS, DISTANCES AND AREAS ON THIS PROJECT ARE GRID, EXCEPT FOR THE EXISTING R/W WIDTH DIMENSION, WHICH IS RECORD.
THE COMBINATION SCALE FACTOR IS 0.99961636

NOTES:
1. THE PROPOSED R/W LINE WHERE A SPIRAL CURVE TRANSITION IS USED IS A CHORD RATHER THAN A CONCENTRIC CURVE.
2. ALL STATIONS AND OFFSETS FOR R/W BREAKS ARE IN REFERENCE TO THE R/W BASELINE.

MONTANA DEPARTMENT OF TRANSPORTATION

RIGHT OF WAY PLAN

PHILLIPS COUNTY

SCALE 1"=100'

0 50' 100' 200' 300'

STATE	RIGHT OF WAY	SHEET NO.	TOTAL SHEETS
MONTANA		13	24
R/W ID.		NH 99-1(10)7	
PROJECT NO.		4055-010	

11 KM N OF MALTA-NORTH

SEE SHEET NO. 2 & 3 FOR OWNERSHIP NAMES, ADDRESSES, AREAS, ETC.

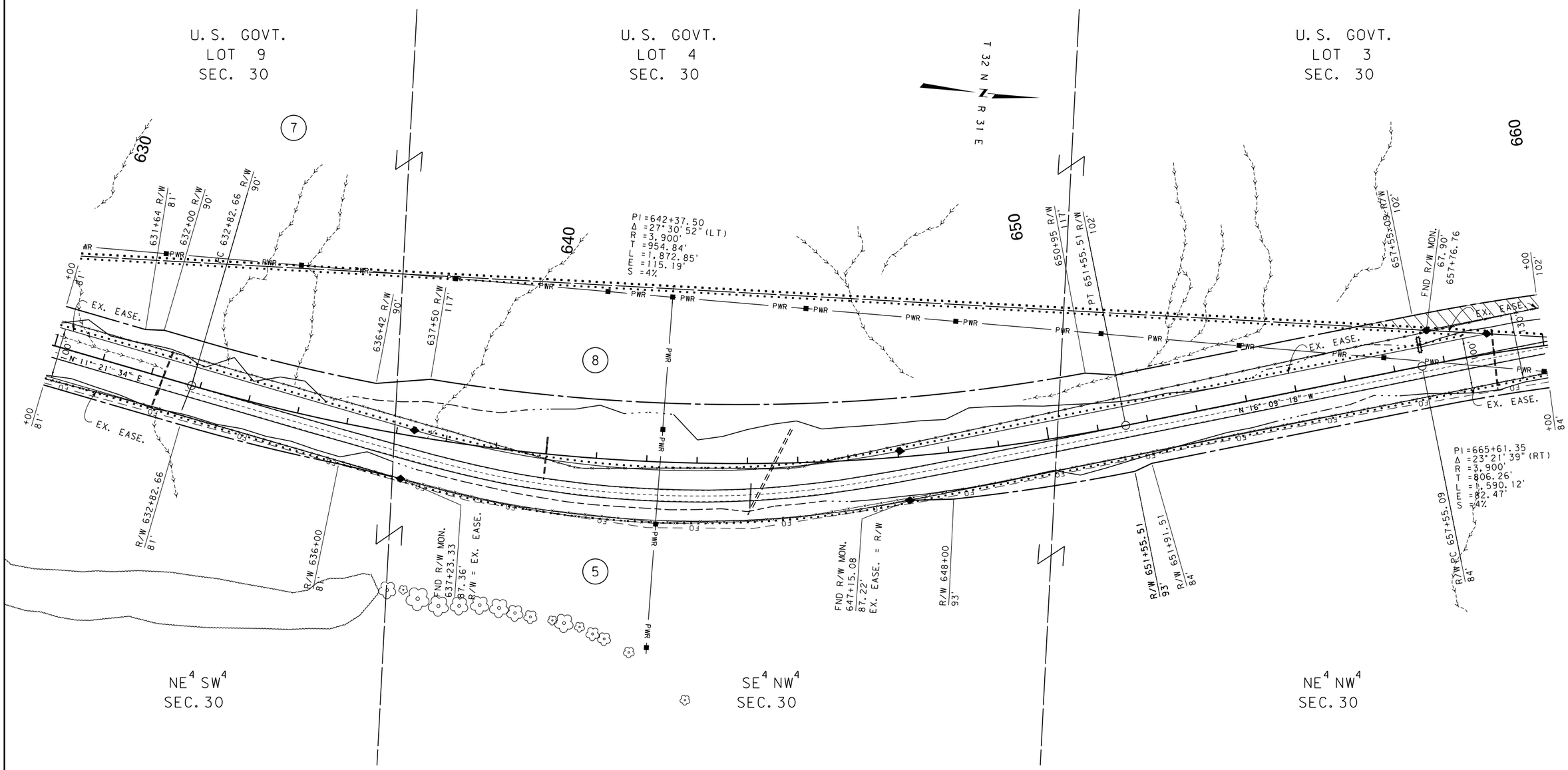

FOR EXISTING R/W
RETRACEMENT, SEE
CERTIFICATE OF SURVEY NO. 418

GRID STATE PLANE COORDINATES

THIS IS A STATE PLANE COORDINATE PROJECT. ALL DIMENSIONS, DISTANCES AND AREAS ON THIS PROJECT ARE GRID, EXCEPT FOR THE EXISTING R/W WIDTH DIMENSION, WHICH IS RECORD.
THE COMBINATION SCALE FACTOR IS 0.99961636

NOTES:
1. THE PROPOSED R/W LINE WHERE A SPIRAL CURVE TRANSITION IS USED IS A CHORD RATHER THAN A CONCENTRIC CURVE.
2. ALL STATIONS AND OFFSETS FOR R/W BREAKS ARE IN REFERENCE TO THE R/W BASELINE.

CONSTRUCTION LIMITS	MAP REVISED
CUT SECTION (TOP OF CUT)	
TRANSITION	
TOE OF FILL	
BACKSLOPE LIMITS INCLUDE ROUNDING	FHWA/MDT APPROVAL 10/25/13

3
2
1

MDT MONTANA DEPARTMENT OF TRANSPORTATION

C:\DGN\4055ropInf04.dgn
6/5/2017
12:16:16 PM CPS - U0460

MONTANA DEPARTMENT OF TRANSPORTATION

RIGHT OF WAY PLAN

PHILLIPS COUNTY

SCALE 1" = 100'

0 50' 100' 200' 300'

STATE	RIGHT OF WAY	SHEET NO.	TOTAL SHEETS
MONTANA		14	24
R/W ID.	NH 99-1(10)7		
PROJECT NO.	4055-010		

11 KM N OF MALTA-NORTH

SEE SHEET NO. 2 & 3 FOR OWNERSHIP NAMES, ADDRESSES, AREAS, ETC.

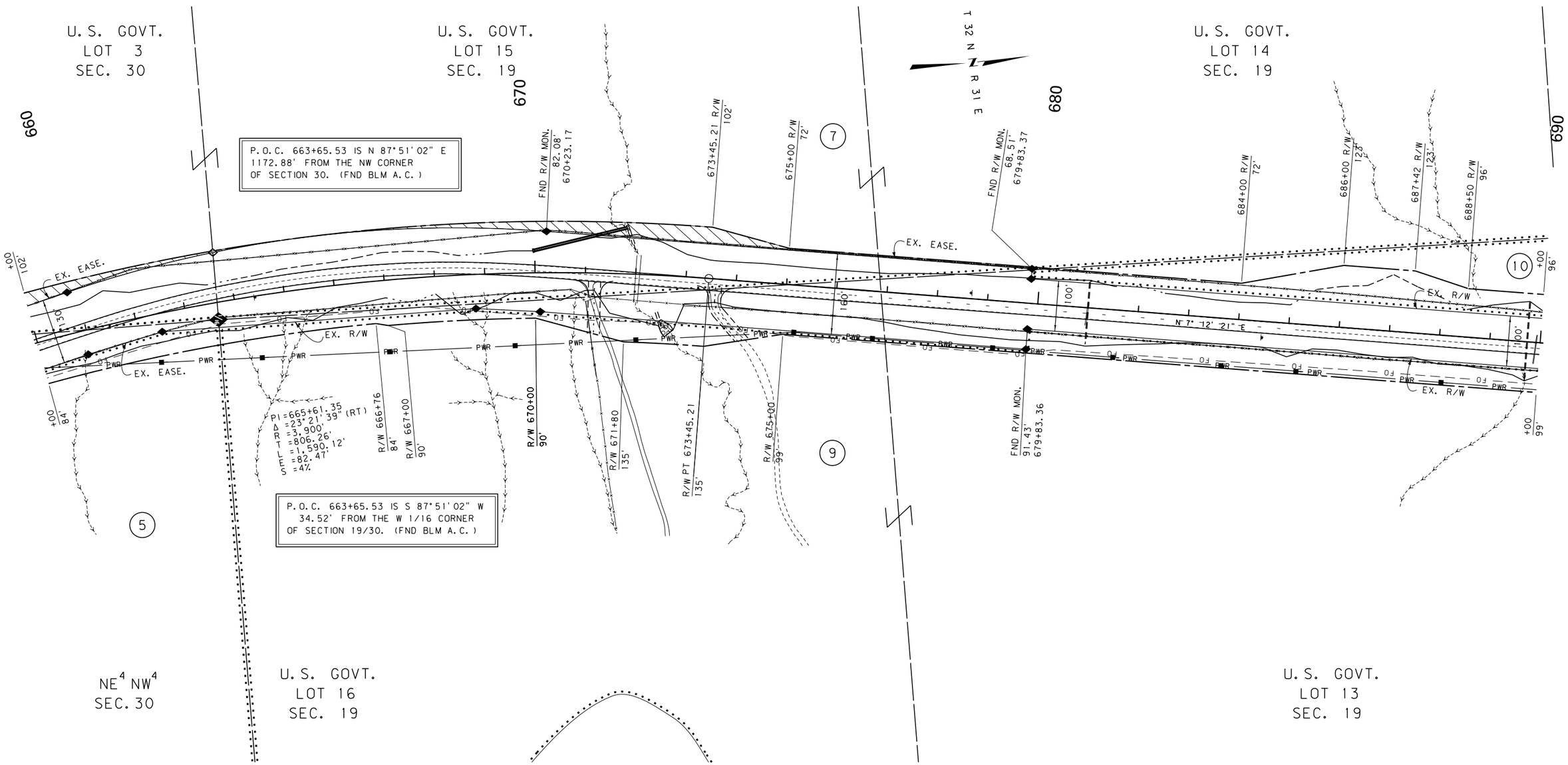

CONSTRUCTION LIMITS	MAP REVISED
CUT SECTION (TOP OF CUT)	
TRANSITION	
TOE OF FILL	
BACKSLOPE LIMITS INCLUDE ROUNDING	FHWA/MDT APPROVAL 10/25/13

3	MDT MONTANA DEPARTMENT OF TRANSPORTATION	C:\DGN\4055ropInf04.dgn
2		6/5/2017
1		12:16:20 PM CPS - U0460

FOR EXISTING R/W
RETRACEMENT, SEE
CERTIFICATE OF SURVEY NO. 418

NOTES:
1. THE PROPOSED R/W LINE WHERE A SPIRAL CURVE TRANSITION IS USED IS A CHORD RATHER THAN A CONCENTRIC CURVE.
2. ALL STATIONS AND OFFSETS FOR R/W BREAKS ARE IN REFERENCE TO THE R/W BASELINE.

GRID STATE PLANE COORDINATES

THIS IS A STATE PLANE COORDINATE PROJECT. ALL DIMENSIONS, DISTANCES AND AREAS ON THIS PROJECT ARE GRID, EXCEPT FOR THE EXISTING R/W WIDTH DIMENSION, WHICH IS RECORD.
THE COMBINATION SCALE FACTOR (CSF) VARIES DEPENDING ON LOCATION. THE CSF FROM THE BEGINNING OF THE PROJECT TO STATION 687+00± IS 0.9991636. FROM SAID LOCATION TO THE END OF THE PROJECT 0.99965318 APPLIES.

MONTANA DEPARTMENT OF TRANSPORTATION

RIGHT OF WAY PLAN

PHILLIPS COUNTY

SCALE 1" = 100'

0 50' 100' 200' 300'

STATE	RIGHT OF WAY	SHEET NO.	TOTAL SHEETS
MONTANA		15	24
R/W ID.	NH 99-1(10)7		
PROJECT NO.	4055-010		

11 KM N OF MALTA-NORTH

SEE SHEET NO. 2 & 3 FOR OWNERSHIP NAMES, ADDRESSES, AREAS, ETC.

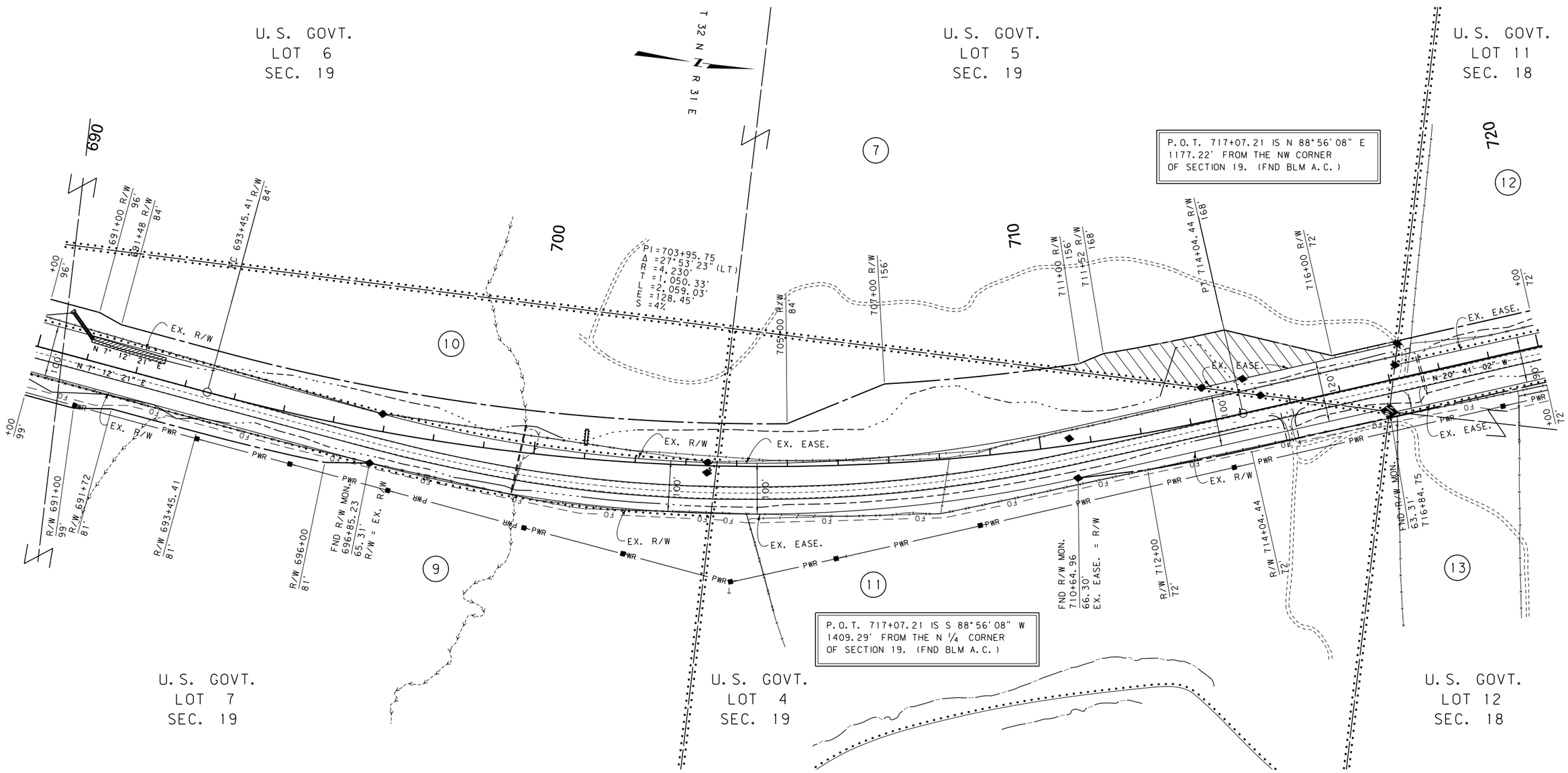

U.S. GOVT.
LOT 7
SEC. 19

U.S. GOVT.
LOT 4
SEC. 19

U.S. GOVT.
LOT 12
SEC. 18

FOR EXISTING R/W
RETRACEMENT, SEE
CERTIFICATE OF SURVEY NO. 418

GRID STATE PLANE COORDINATES

THIS IS A STATE PLANE COORDINATE PROJECT. ALL DIMENSIONS, DISTANCES AND AREAS ON THIS PROJECT ARE GRID, EXCEPT FOR THE EXISTING R/W WIDTH DIMENSION, WHICH IS RECORD.
THE COMBINATION SCALE FACTOR IS 0.99965318.

NOTES:
1. THE PROPOSED R/W LINE WHERE A SPIRAL CURVE TRANSITION IS USED IS A CHORD RATHER THAN A CONCENTRIC CURVE.
2. ALL STATIONS AND OFFSETS FOR R/W BREAKS ARE IN REFERENCE TO THE R/W BASELINE.

CONSTRUCTION LIMITS
CUT SECTION — TOP OF CUT
TRANSITION
TOE OF FILL
BACKSLOPE LIMITS INCLUDE ROUNDING

MAP REVISED

FHWA/MDT APPROVAL
10/25/13

3	MDT MONTANA DEPARTMENT OF TRANSPORTATION	C:\DGN\4055ropInf04.dgn
2		6/5/2017
1		12:16:23 PM CPS - U0460

MONTANA DEPARTMENT OF TRANSPORTATION

RIGHT OF WAY PLAN

PHILLIPS COUNTY

SCALE 1" = 100'

0 50' 100' 200' 300'

STATE	RIGHT OF WAY	SHEET NO.	TOTAL SHEETS
MONTANA		16	24
R/W ID.		S 337(4)	
PROJECT NO.		Y233-004-000	

MALTA - LORING

SEE SHEET NO. 2 & 3 FOR OWNERSHIP NAMES, ADDRESSES, AREAS, ETC.

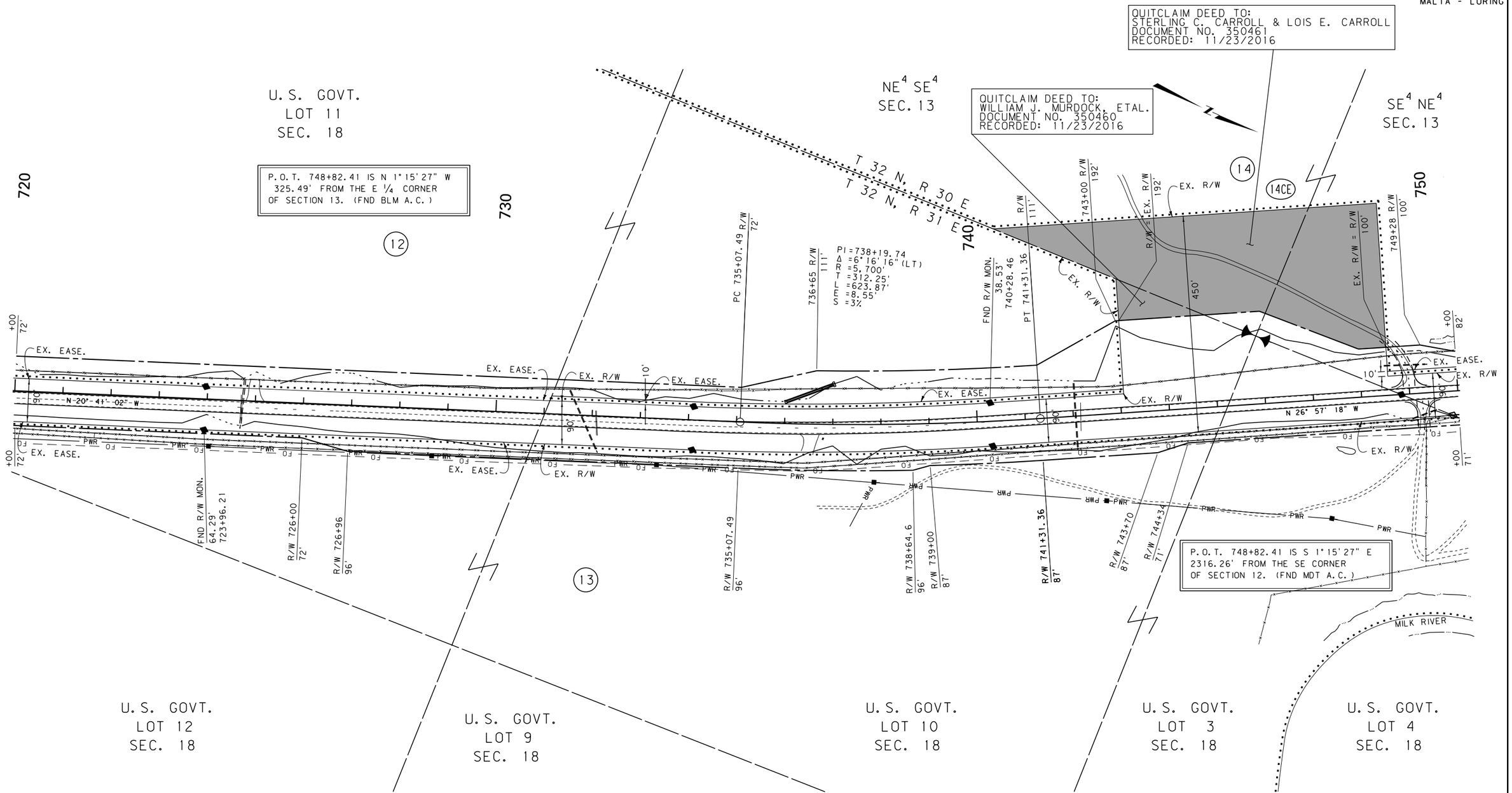

FOR EXISTING R/W
RETRACEMENT, SEE
CERTIFICATE OF SURVEY NO. 418

GRID STATE PLANE COORDINATES

THIS IS A STATE PLANE COORDINATE PROJECT. ALL DIMENSIONS, DISTANCES AND AREAS ON THIS PROJECT ARE GRID, EXCEPT FOR THE EXISTING R/W WIDTH DIMENSION, WHICH IS RECORD.
THE COMBINATION SCALE FACTOR IS 0.99965318.

NOTES:
1. THE PROPOSED R/W LINE WHERE A SPIRAL CURVE TRANSITION IS USED IS A CHORD RATHER THAN A CONCENTRIC CURVE.
2. ALL STATIONS AND OFFSETS FOR R/W BREAKS ARE IN REFERENCE TO THE R/W BASELINE.

CONSTRUCTION LIMITS	MAP REVISED 3/10/14 5/16/14 6/05/17
CUT SECTION (TOP OF CUT)	
TRANSITION	
TOE OF FILL	
BACKSLOPE LIMITS INCLUDE ROUNDING	FHWA/MDT APPROVAL 10/25/13

3
2
1

MDT MONTANA DEPARTMENT OF TRANSPORTATION

C:\DGN\4055ropInf05.dgn
6/5/2017
12:16:32 PM CPS-U0460

MONTANA DEPARTMENT OF TRANSPORTATION

RIGHT OF WAY PLAN

PHILLIPS COUNTY

SCALE 1" = 100'

0 50' 100' 200' 300'

STATE	RIGHT OF WAY	SHEET NO.	TOTAL SHEETS
MONTANA		17	24
R/W ID.		NH 99-1(10)7	
PROJECT NO.		4055-010	

11 KM N OF MALTA-NORTH

SEE SHEET NO. 2 & 3 FOR OWNERSHIP NAMES, ADDRESSES, AREAS, ETC.

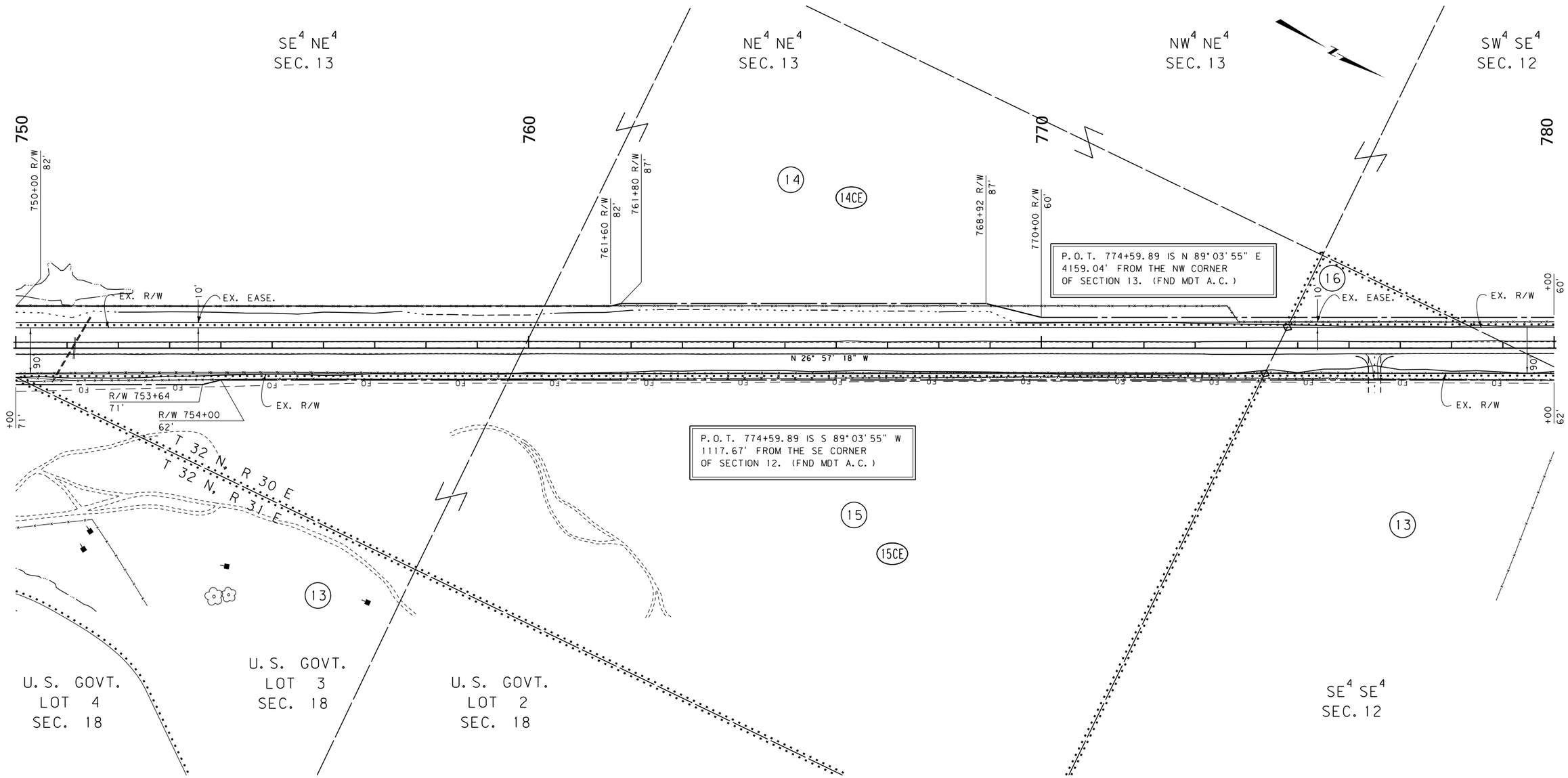

CONSTRUCTION LIMITS	MAP REVISED 5/16/14
CUT SECTION (TOP OF CUT)	
TRANSITION	
TOE OF FILL	
BACKSLOPE LIMITS INCLUDE ROUNDING	FHWA/MDT APPROVAL 10/25/13

3	MDT MONTANA DEPARTMENT OF TRANSPORTATION	C:\DGN\4055ropInf05.dgn
2		6/5/2017
1		12:16:35 PM CPS-U0460

FOR EXISTING R/W
RETRACEMENT, SEE
CERTIFICATE OF SURVEY NO 418

GRID STATE PLANE COORDINATES

THIS IS A STATE PLANE COORDINATE PROJECT. ALL DIMENSIONS, DISTANCES AND AREAS ON THIS PROJECT ARE GRID, EXCEPT FOR THE EXISTING R/W WIDTH DIMENSION, WHICH IS RECORD.
THE COMBINATION SCALE FACTOR IS 0.99965318.

NOTES:
1. THE PROPOSED R/W LINE WHERE A SPIRAL CURVE TRANSITION IS USED IS A CHORD RATHER THAN A CONCENTRIC CURVE.
2. ALL STATIONS AND OFFSETS FOR R/W BREAKS ARE IN REFERENCE TO THE R/W BASELINE.

MONTANA DEPARTMENT OF TRANSPORTATION

RIGHT OF WAY PLAN

PHILLIPS COUNTY

SCALE 1" = 100'

0 50' 100' 200' 300'

STATE	RIGHT OF WAY	SHEET NO.	TOTAL SHEETS
MONTANA		18	24
R/W ID.	NH 99-1(10)7		
PROJECT NO.	4055-010		

11 KM N OF MALTA-NORTH

SEE SHEET NO. 2 & 3 FOR OWNERSHIP NAMES, ADDRESSES, AREAS, ETC.

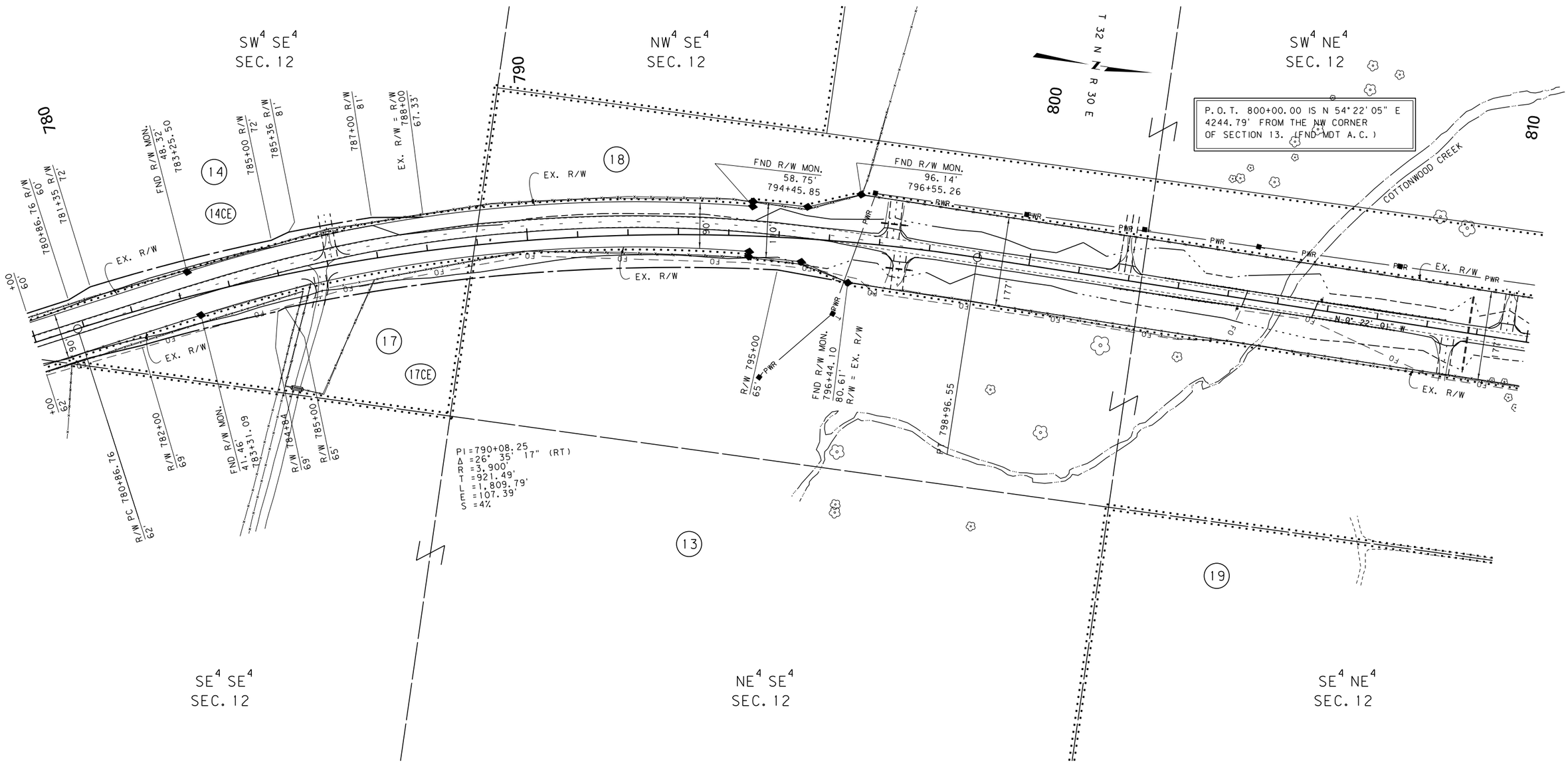

FOR EXISTING R/W
RETRACEMENT, SEE
CERTIFICATE OF SURVEY NO. 418

GRID STATE PLANE COORDINATES

THIS IS A STATE PLANE COORDINATE PROJECT. ALL DIMENSIONS, DISTANCES AND AREAS ON THIS PROJECT ARE GRID, EXCEPT FOR THE EXISTING R/W WIDTH DIMENSION, WHICH IS RECORD.
THE COMBINATION SCALE FACTOR IS 0.99965318.

NOTES:
1. THE PROPOSED R/W LINE WHERE A SPIRAL CURVE TRANSITION IS USED IS A CHORD RATHER THAN A CONCENTRIC CURVE.
2. ALL STATIONS AND OFFSETS FOR R/W BREAKS ARE IN REFERENCE TO THE R/W BASELINE.

CONSTRUCTION LIMITS
CUT SECTION (TOP OF CUT)
TRANSITION
TOE OF FILL
BACKSLOPE LIMITS INCLUDE ROUNDING

MAP REVISED 3/10/14 5/16/14

FHWA/MDT APPROVAL
10/25/13

3
2
1

MDT MONTANA DEPARTMENT OF TRANSPORTATION

C:\DGN\4055ropInf05.dgn
6/5/2017
12:16:38 PM CPS-U0460

MONTANA DEPARTMENT OF TRANSPORTATION

RIGHT OF WAY PLAN

PHILLIPS COUNTY

SCALE 1" = 100'

0 50' 100' 200' 300'

STATE	RIGHT OF WAY	SHEET NO.	TOTAL SHEETS
MONTANA		19	24
R/W ID.	NH 99-1(10)7		
PROJECT NO.	4055-010		

11 KM N OF MALTA-NORTH

SEE SHEET NO. 2 & 3 FOR OWNERSHIP NAMES, ADDRESSES, AREAS, ETC.

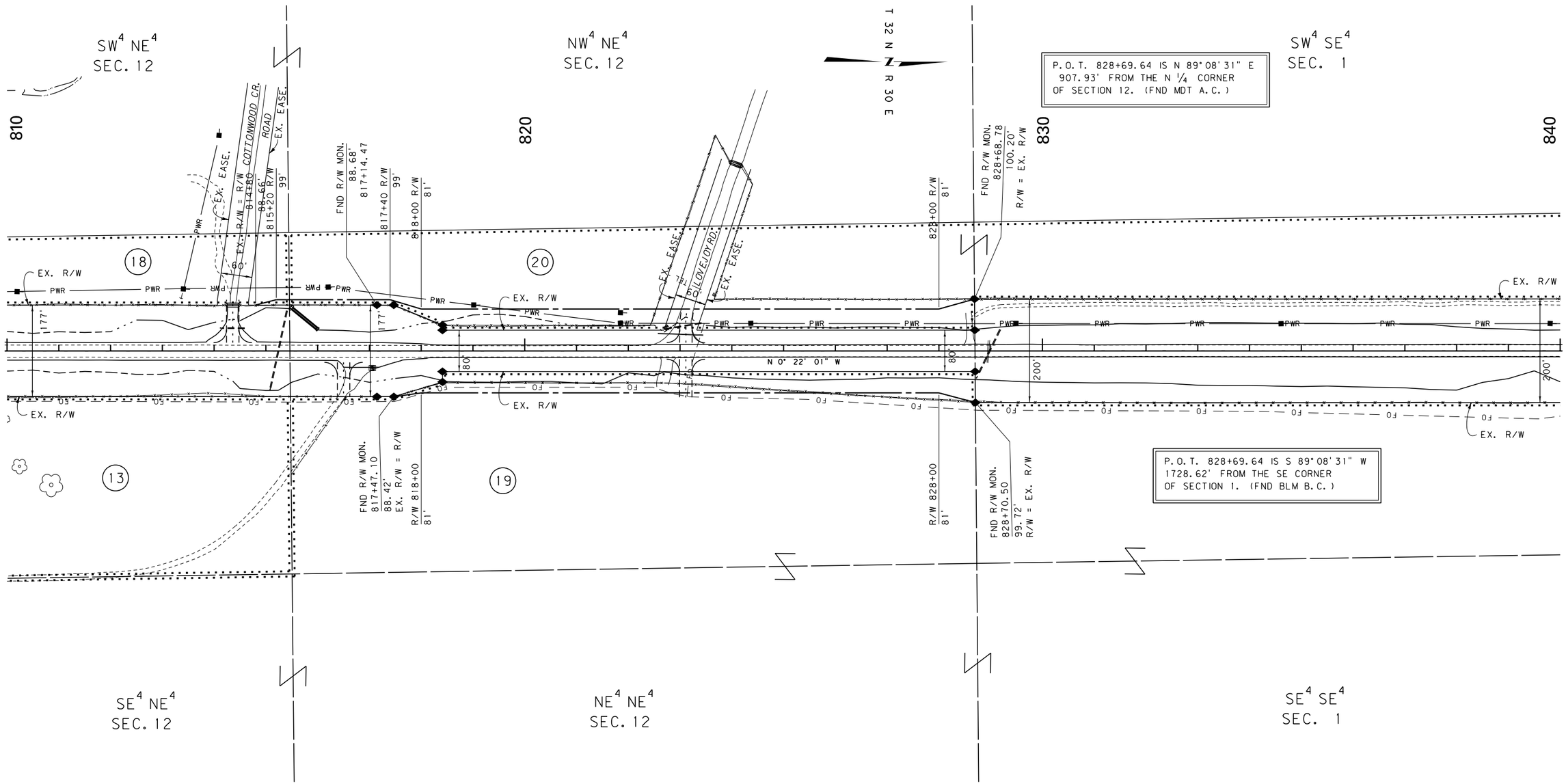

FOR EXISTING R/W
RETRACEMENT, SEE
CERTIFICATE OF SURVEY NO. 418

GRID STATE PLANE COORDINATES

THIS IS A STATE PLANE COORDINATE PROJECT. ALL DIMENSIONS, DISTANCES AND AREAS ON THIS PROJECT ARE GRID, EXCEPT FOR THE EXISTING R/W WIDTH DIMENSION, WHICH IS RECORD.
THE COMBINATION SCALE FACTOR IS 0.99965318

NOTES:
1. THE PROPOSED R/W LINE WHERE A SPIRAL CURVE TRANSITION IS USED IS A CHORD RATHER THAN A CONCENTRIC CURVE.
2. ALL STATIONS AND OFFSETS FOR R/W BREAKS ARE IN REFERENCE TO THE R/W BASELINE.

CONSTRUCTION LIMITS	MAP REVISED 5/16/14
CUT SECTION (TOP OF CUT)	
TRANSITION	
TOE OF FILL	
BACKSLOPE LIMITS INCLUDE ROUNDING	FHWA/MDT APPROVAL 10/25/13

3	MDT MONTANA DEPARTMENT OF TRANSPORTATION	C:\DGN\4055ropInf06.dgn
2		6/5/2017
1		12:16:46 PM CPS - U0460

MONTANA DEPARTMENT OF TRANSPORTATION

RIGHT OF WAY PLAN

PHILLIPS COUNTY

SCALE 1" = 100'

0 50' 100' 200' 300'

STATE	RIGHT OF WAY	SHEET NO.	TOTAL SHEETS
MONTANA		20	24
R/W ID.		NH 99-1(10)7	
PROJECT NO.		4055-010	

11 KM N OF MALTA-NORTH

SEE SHEET NO. 2 & 3 FOR OWNERSHIP NAMES, ADDRESSES, AREAS, ETC.

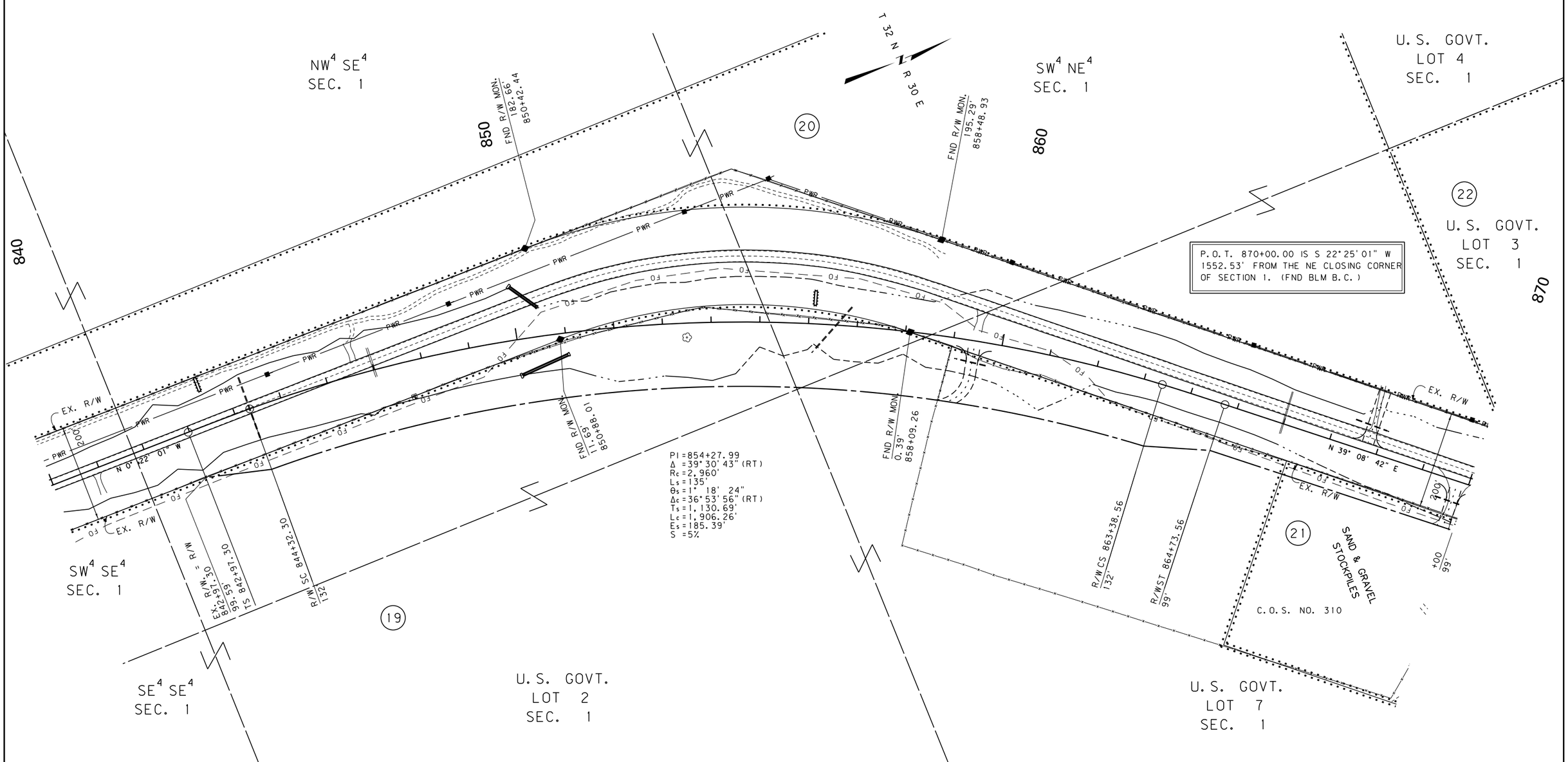

CONSTRUCTION LIMITS	MAP REVISED
CUT SECTION (TOP OF CUT)	
TRANSITION	
TOE OF FILL	
BACKSLOPE LIMITS INCLUDE ROUNDING	FHWA/MDT APPROVAL 10/25/13

3	MDT MONTANA DEPARTMENT OF TRANSPORTATION	C:\DGN\4055ropInf06.dgn	
2		6/5/2017	
1		12:16:50 PM	CPS - U0460

FOR EXISTING R/W
RETRACEMENT, SEE
CERTIFICATE OF SURVEY NO. 418

GRID STATE PLANE COORDINATES

THIS IS A STATE PLANE COORDINATE PROJECT. ALL DIMENSIONS, DISTANCES AND AREAS ON THIS PROJECT ARE GRID, EXCEPT FOR THE EXISTING R/W WIDTH DIMENSION, WHICH IS RECORD.
THE COMBINATION SCALE FACTOR IS 0.99965318

NOTES:
1. THE PROPOSED R/W LINE WHERE A SPIRAL CURVE TRANSITION IS USED IS A CHORD RATHER THAN A CONCENTRIC CURVE.
2. ALL STATIONS AND OFFSETS FOR R/W BREAKS ARE IN REFERENCE TO THE R/W BASELINE.

MONTANA DEPARTMENT OF TRANSPORTATION

RIGHT OF WAY PLAN

PHILLIPS COUNTY

SCALE 1"=100'

0 50' 100' 200' 300'

STATE	RIGHT OF WAY	SHEET NO.	TOTAL SHEETS
MONTANA		21	24
R/W ID.	NH 99-1(10)7		
PROJECT NO.	4055-010		

11 KM N OF MALTA-NORTH

SEE SHEET NO. 2 & 3 FOR OWNERSHIP NAMES, ADDRESSES, AREAS, ETC.

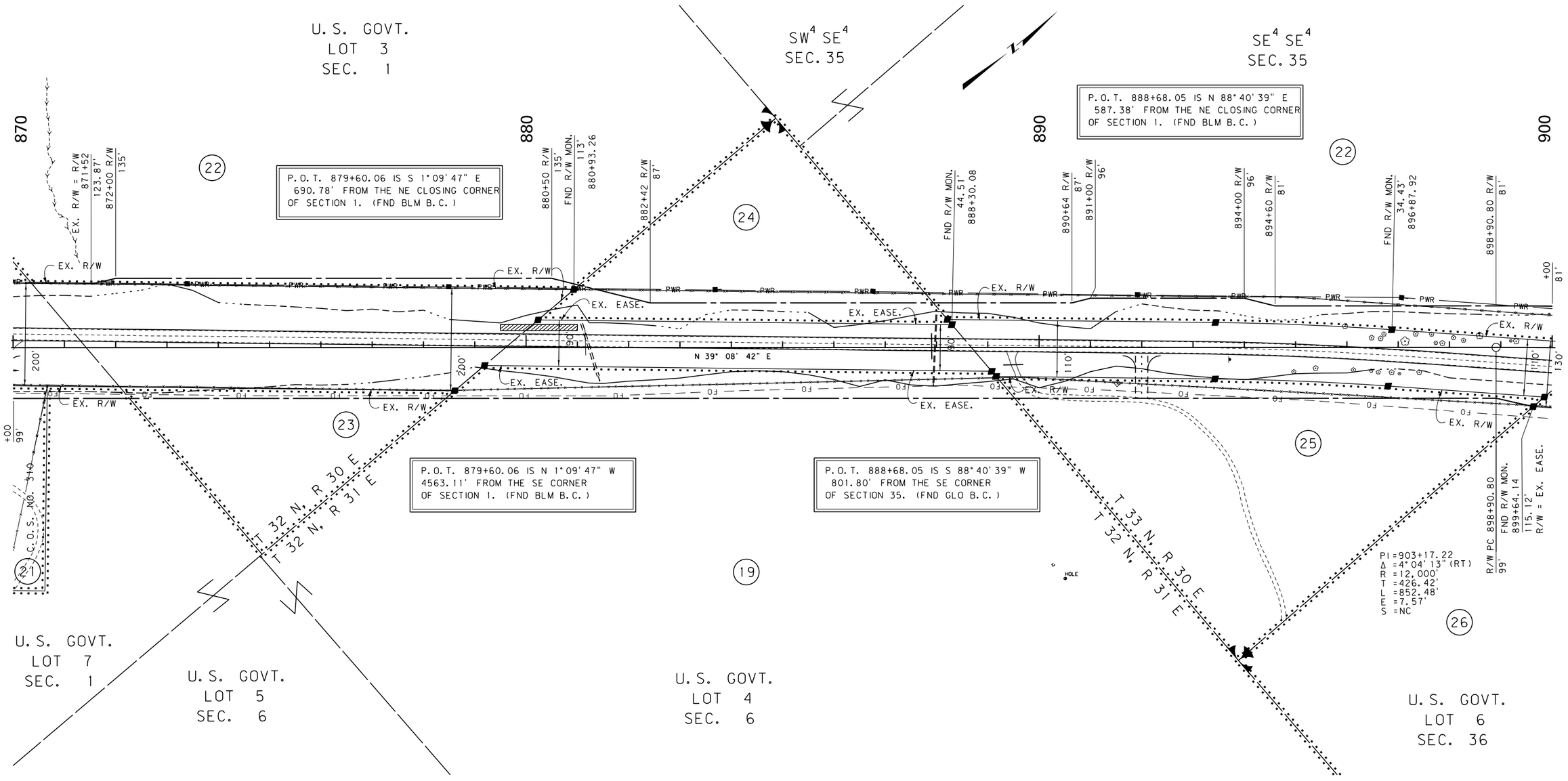

FOR EXISTING R/W
RETRACEMENT, SEE
CERTIFICATE OF SURVEY NO. 418

GRID STATE PLANE COORDINATES

THIS IS A STATE PLANE COORDINATE PROJECT. ALL DIMENSIONS, DISTANCES AND AREAS ON THIS PROJECT ARE GRID, EXCEPT FOR THE EXISTING R/W WIDTH DIMENSION, WHICH IS RECORD.
THE COMBINATION SCALE FACTOR IS 0.99965318

NOTES:
1. THE PROPOSED R/W LINE WHERE A SPIRAL CURVE TRANSITION IS USED IS A CHORD RATHER THAN A CONCENTRIC CURVE.
2. ALL STATIONS AND OFFSETS FOR R/W BREAKS ARE IN REFERENCE TO THE R/W BASELINE.

CONSTRUCTION LIMITS
CUT SECTION — TOP OF CUT
TRANSITION
TOE OF FILL
BACKSLOPE LIMITS INCLUDE ROUNDING

MAP REVISED _____

FHWA/MDT APPROVAL
10/25/13

3
2
1

MDT MONTANA DEPARTMENT OF TRANSPORTATION

C:\DGN\4055ropInf06.dgn
6/5/2017
12:16:53 PM CPS - U0460

MONTANA DEPARTMENT OF TRANSPORTATION

RIGHT OF WAY PLAN

PHILLIPS COUNTY

SCALE 1" = 100'

0 50' 100' 200' 300'

STATE	RIGHT OF WAY	SHEET NO.	TOTAL SHEETS
MONTANA		22	24
R/W ID.		NH 99-1(10)7	
PROJECT NO.		4055-010	

11 KM N OF MALTA-NORTH

SEE SHEET NO. 2 & 3 FOR OWNERSHIP NAMES, ADDRESSES, AREAS, ETC.

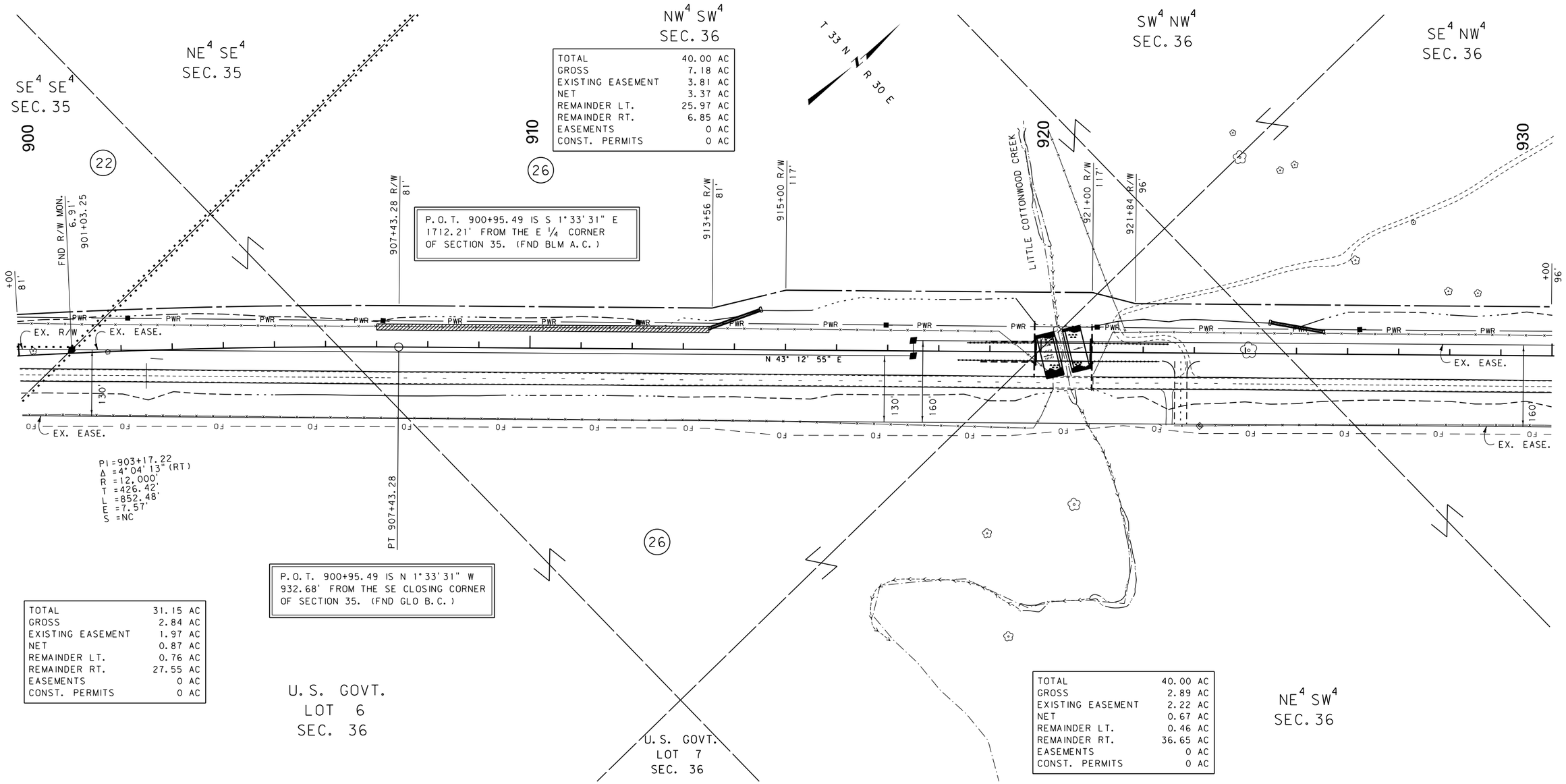

P.O.T. 900+95.49 IS S 1°33'31" E 1712.21' FROM THE E ¼ CORNER OF SECTION 35. (FND BLM A.C.)

P.O.T. 900+95.49 IS N 1°33'31" W 932.68' FROM THE SE CLOSING CORNER OF SECTION 35. (FND GLO B.C.)

TOTAL	40.00 AC
GROSS	7.18 AC
EXISTING EASEMENT	3.81 AC
NET	3.37 AC
REMAINDER LT.	25.97 AC
REMAINDER RT.	6.85 AC
EASEMENTS	0 AC
CONST. PERMITS	0 AC

TOTAL	31.15 AC
GROSS	2.84 AC
EXISTING EASEMENT	1.97 AC
NET	0.87 AC
REMAINDER LT.	0.76 AC
REMAINDER RT.	27.55 AC
EASEMENTS	0 AC
CONST. PERMITS	0 AC

TOTAL	40.00 AC
GROSS	2.89 AC
EXISTING EASEMENT	2.22 AC
NET	0.67 AC
REMAINDER LT.	0.46 AC
REMAINDER RT.	36.65 AC
EASEMENTS	0 AC
CONST. PERMITS	0 AC

FOR EXISTING R/W RETRACEMENT, SEE CERTIFICATE OF SURVEY NO. 418

GRID STATE PLANE COORDINATES

THIS IS A STATE PLANE COORDINATE PROJECT. ALL DIMENSIONS, DISTANCES AND AREAS ON THIS PROJECT ARE GRID, EXCEPT FOR THE EXISTING R/W WIDTH DIMENSION, WHICH IS RECORD.
THE COMBINATION SCALE FACTOR IS 0.99965318

NOTES:
1. THE PROPOSED R/W LINE WHERE A SPIRAL CURVE TRANSITION IS USED IS A CHORD RATHER THAN A CONCENTRIC CURVE.
2. ALL STATIONS AND OFFSETS FOR R/W BREAKS ARE IN REFERENCE TO THE R/W BASELINE.

CONSTRUCTION LIMITS
CUT SECTION (TOP OF CUT)
TRANSITION
TOE OF FILL
BACKSLOPE LIMITS INCLUDE ROUNDING

MAP REVISED

FHWA/MDT APPROVAL
10/25/13

3
2
1

MDT MONTANA DEPARTMENT OF TRANSPORTATION

C:\DGN\4055ropInf07.dgn
6/5/2017
12:17:01 PM CPS - U0460

MONTANA DEPARTMENT OF TRANSPORTATION
RIGHT OF WAY PLAN
PHILLIPS COUNTY
SCALE 1"=100'
0 50' 100' 200' 300'

STATE	RIGHT OF WAY	SHEET NO.	TOTAL SHEETS
MONTANA		23	24
R/W ID.		NH 99-1(10)7	
PROJECT NO.		4055-010	

11 KM N OF MALTA-NORTH

SEE SHEET NO. 2 & 3 FOR OWNERSHIP NAMES, ADDRESSES, AREAS, ETC.

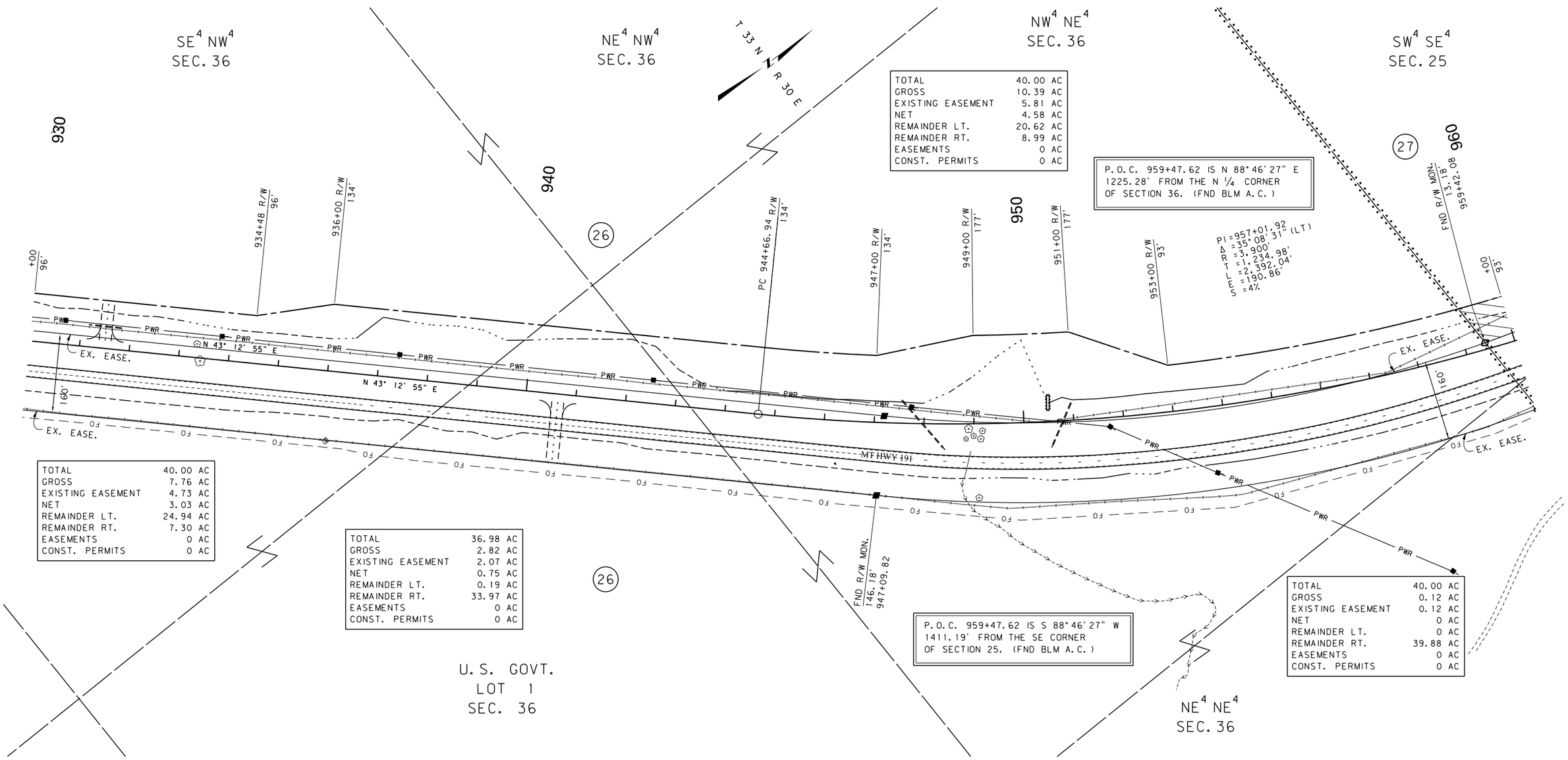

TOTAL	40.00 AC
GROSS	10.39 AC
EXISTING EASEMENT	5.81 AC
NET	4.58 AC
REMAINDER LT.	20.62 AC
REMAINDER RT.	8.99 AC
EASEMENTS	0 AC
CONST. PERMITS	0 AC

P.O.C. 959+47.62 IS N 88°46'27" E 1225.28' FROM THE N 1/4 CORNER OF SECTION 36. (FND BLM A.C.)

TOTAL	40.00 AC
GROSS	7.76 AC
EXISTING EASEMENT	4.73 AC
NET	3.03 AC
REMAINDER LT.	24.94 AC
REMAINDER RT.	7.30 AC
EASEMENTS	0 AC
CONST. PERMITS	0 AC

TOTAL	36.98 AC
GROSS	2.82 AC
EXISTING EASEMENT	2.07 AC
NET	0.75 AC
REMAINDER LT.	0.19 AC
REMAINDER RT.	33.97 AC
EASEMENTS	0 AC
CONST. PERMITS	0 AC

P.O.C. 959+47.62 IS S 88°46'27" W 1411.19' FROM THE SE CORNER OF SECTION 25. (FND BLM A.C.)

TOTAL	40.00 AC
GROSS	0.12 AC
EXISTING EASEMENT	0.12 AC
NET	0 AC
REMAINDER LT.	0 AC
REMAINDER RT.	39.88 AC
EASEMENTS	0 AC
CONST. PERMITS	0 AC

FOR EXISTING R/W RETRACEMENT, SEE CERTIFICATE OF SURVEY NO. 418

GRID STATE PLANE COORDINATES

THIS IS A STATE PLANE COORDINATE PROJECT. ALL DIMENSIONS, DISTANCES AND AREAS ON THIS PROJECT ARE GRID, EXCEPT FOR THE EXISTING R/W WIDTH DIMENSION, WHICH IS RECORD.
THE COMBINATION SCALE FACTOR IS 0.99965318

NOTES:
1. THE PROPOSED R/W LINE WHERE A SPIRAL CURVE TRANSITION IS USED IS A CHORD RATHER THAN A CONCENTRIC CURVE.
2. ALL STATIONS AND OFFSETS FOR R/W BREAKS ARE IN REFERENCE TO THE R/W BASELINE.

CONSTRUCTION LIMITS
CUT SECTION — TOP OF CUT
TRANSITION
TOE OF FILL
BACKSLOPE LIMITS INCLUDE ROUNDING

MAP REVISED 3/10/14

FHWA/MDT APPROVAL 10/25/13

3
2
1

MDT MONTANA DEPARTMENT OF TRANSPORTATION

C:\DGN\4055ropInf07.dgn
6/5/2017
12:17:05 PM CPS - U0460

MONTANA DEPARTMENT OF TRANSPORTATION
RIGHT OF WAY PLAN
PHILLIPS COUNTY
SCALE 1"=100'
0 50' 100' 200' 300'

STATE	RIGHT OF WAY	SHEET NO.	TOTAL SHEETS
MONTANA		24	24
R/W ID.		NH 99-1(10)7	
PROJECT NO.		4055-010	

11 KM N OF MALTA-NORTH

SEE SHEET NO. 2 & 3 FOR OWNERSHIP NAMES, ADDRESSES, AREAS, ETC.

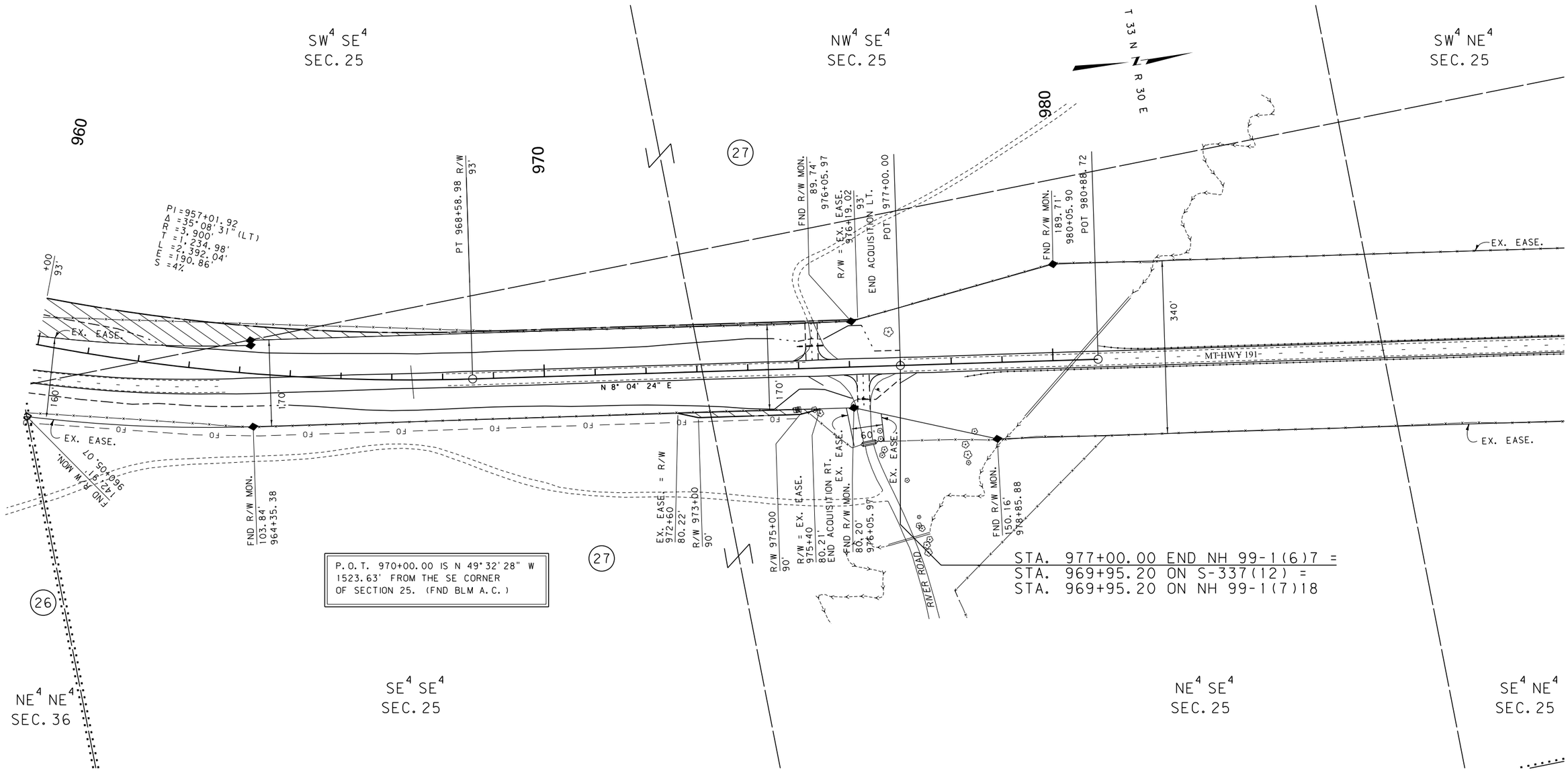

P.O.T. 970+00.00 IS N 49°32'28" W 1523.63' FROM THE SE CORNER OF SECTION 25. (FND BLM A.C.)

FOR EXISTING R/W RETRACEMENT, SEE CERTIFICATE OF SURVEY NO. 418

GRID STATE PLANE COORDINATES

THIS IS A STATE PLANE COORDINATE PROJECT. ALL DIMENSIONS, DISTANCES AND AREAS ON THIS PROJECT ARE GRID, EXCEPT FOR THE EXISTING R/W WIDTH DIMENSION, WHICH IS RECORD.
THE COMBINATION SCALE FACTOR IS 0.99965318

NOTES:
1. THE PROPOSED R/W LINE WHERE A SPIRAL CURVE TRANSITION IS USED IS A CHORD RATHER THAN A CONCENTRIC CURVE.
2. ALL STATIONS AND OFFSETS FOR R/W BREAKS ARE IN REFERENCE TO THE R/W BASELINE.

CONSTRUCTION LIMITS
CUT SECTION (TOP OF CUT)
TRANSITION
TOE OF FILL
BACKSLOPE LIMITS INCLUDE ROUNDING

MAP REVISED

FHWA/MDT APPROVAL
10/25/13

3	MDT MONTANA DEPARTMENT OF TRANSPORTATION	C:\DGN\4055ropInf07.dgn
2		6/5/2017
1		12:17:08 PM CPS - U0460

MONTANA DEPARTMENT OF TRANSPORTATION

RIGHT OF WAY PLAN

PHILLIPS COUNTY

SCALE 1" = 100'

0 50' 100' 200' 300'